MASON COUNTY
HARTSTENE POINTE

WATER SYSTEM PLAN

G&O No. 06513
August 2008

Gray & Osborne, Inc.
CONSULTING ENGINEERS

Mason County: Hartstene Pointe

Water System Plan

August 2008

Gray & Osborne, Inc.
CONSULTING ENGINEERS

August 18, 2008

Ms. Karen Klocke
Washington State Department of Health
Southwest Drinking Water Regional Operations
P.O. Box 47823
Olympia, Washington 98504-7823

SUBJECT: HARTSTENE POINTE WATER SYSTEM, ID NO. 315690 WATER SYSTEM PLAN, ODW PROJECT NO. 07-1213
MASON COUNTY, WASHINGTON
G&O #06513.00

Dear Ms. Klocke:

We have reviewed your correspondence to the Hartstene Pointe Community dated February 27, 2008, regarding the Department of Health's (DOH's) review of the above-subject Water System Plan (Plan).

Based on discussions between Tom Moore of Mason County Public Works and the undersigned, we understand the County requested an extension in responding to DOH comments from the original due date of May 25, 2008.

This letter summarizes the revisions made to the Plan in response to your second draft review. DOH review comments are restated and our response for each comment is shown in *italics*.

GENERAL COMMENTS

1. Pages E-1, 1-12, and throughout the WSP. This WSP uses a total of 407 connections throughout the plan for various purposes including capacity determinations; however, the most recent Water Facilities Inventory (WFI) lists 442 active connections (158 fulltime residential, 185 part-time residential, 90 connections in multi-family buildings, 6 RV connections, and 3 commercial connections). **The number of existing, active connections must be corrected in this WSP or in the WFI.** This correction or clarification is very important since capacity determinations depend in part upon this number.

8513 NE Hazel Dell Avenue, Suite 106 Vancouver, Washington 98665 (360) 571-3350 Fax (360) 571-4547

Printed on recycled paper

This Plan has been modified using a total of 442 active connections for consistency with the WFI. On page 1-12, 407 connections was deleted and replaced with 442 connections.

2. Pages E-2, E-3, Pp. 2-3, 2-4, and throughout this WSP. The Equivalent Residential Unit (ERU) value of 172 gallons per day (gpd) is based in part on assuming equivalent source usage across the year by seasonal, non-residential, and full-time residential connections. The ERU value must be based on and reflect water usage by a full-time single family residential unit. The WFI indicates the number of full-time single family residential connections is less than half of the existing active connections. Therefore, the actual value for an ERU for his community would be greater than 172 gpd. As an example, an approximate estimate of the ERU value during high occupancy periods can be derived using the 2006 Total Source Production of 25,600,000 gallons and the 2006 peaking factor (P. 2-3), and by assuming all connections roughly use an ERU. Assuming 442 active connections, approximately 232 gpd/ERU is derived. It should be noted that a very conservative and a not-conservative assumption were used in this example derivation. However, this WSP could use actual monthly water usage data (not presented in this WSP) to derive more accurate estimates of the ERU value. **Please re-calculate the ERU, as best as possible, based on usage by fully occupied residential units (monthly source data may be used for this derivation).**

   This Plan has recalculated the ERU to be 228 gpd/ERU based on the August 2006 production data. On page 2-4, the following sentence was added: "However, because the majority of customers in the Community are seasonal residents, water usage from August will be used. This consumption number from 2006 provides an accurate view of the water usage by the entire Community."

SPECIFIC COMMENTS

1. System Description. Identification of a retail service area is a requirement of the Municipal Water Law. **Please identify the retail service area on the service area map (Figure 1-3).**

   The Community of Hartstene Pointe's entire service area is also their retail service area. Figure 1-3 has been revised to reflect this.

2. System Description. The recently passed Municipal Water Law Legislation requires that this WSP be consistent with applicable adopted

local plans, regulations, and policies. Mason County is the local land use authority within the water service area. **Please provide the enclosed "Consistency Statement Checklist" signed by the appropriate Mason County official.**

The revision was made. Consistency statements are located in Appendix S: DOH Documents.

3. Pages 1-3, 1-11, 4-5, and 6-6. This WSP describes existing service meter connections to the wastewater treatment plant (WWTP) and Community Center only, to the Community Center only, or to the Community Center and the Marina only. **Please revise this information. Also, please describe when all three commercial connections will have service meters.**

   On page 1-3, the previous CIP in the WSP states that the Community would meter the WWTP and the Community Center. This table states that the Community Center metering was accomplished, but the WWTP metering was not. On page 1-11, there are no changes; the Community Center and the Marina are the only connections that are currently metered within the Community. On page 4-5, the following sentence was added: "Meter installation will take place in five phases, and the WWTP will be metered during the first phase."

4. Pages 1-7 (Water Treatment), 8-2, and other locations. The arsenic treatment system approved **by ODW (Project #07-0613, approved August 2007) must be included and described in the WSP.**

   On page 1-7, the following sentence was added: "Well No. 2 exceeded the arsenic MCL and has an Office of Drinking Water (ODW) approved treatment system scheduled for construction in 2008."

5. Page 1-13. **Please mention the Cross Connection Control Program information located in Appendix O.**

   The revision was made. On page 1-13, the following sentence was added: "The CCCP is located in Appendix O."

6. Table 2-2. The WFI lists 442 active connections at the end of 2007 as follows: 343 single-family residential connections, 90 multi-family connections, and 9 public connections. **Please revise or clarify.**

Printed on recycled paper

The revision was made.

7. Page 2-2, 2-3, 2-4. This section says that source meter readings are taken every month. However, pages 1-13 and Table 2-4 indicate that daily production data is available. **Please clarify. Also, please clarify if the production data in Tables 2-3 and 2-4 represents treated water production or source water usage.** Derivation of ERU values must be based on source water usage.

   Source water meter readings are taken once a month. Daily production data is not available. On page 1-13, Record Keeping, "daily" is replaced with "monthly." On page 2-3, the following sentence was added: "Daily production data is not available, therefore the maximum day production values were estimated based on the maximum monthly pumping records." Production data is based on source water usage.

8. Table 2-7, Basic Planning Data. **Please provide a water demand forecast with and without water use efficiency savings assumptions.**

   Water use efficiency goals are established based on the level of distribution system leakage (DSL) in the system. Without meters, we are unable to determine the level of DSL within the Community. A goal of 1 percent reduction per year is assumed, but water demands cannot be forecast without knowing the amount of DSL currently being lost within the system.

9. Pages 2-4 and 2-5. **Water usage at the metered commercial connections should be recorded on a regular basis to help detect and unusually high usage or loss.**

   The revision was noted. On page 2-5, the following sentence was added: "Water usage at the metered commercial connections should be recorded on a regular basis to help detect any unusually high usage or loss."

10. Page 2-7. Please not that the WFI's existing number of connections (442) is close to the number of connections projected for Year 2012. **Please amend.**

    The number of projected service connections has been revised based on the most current data from the WFI. The Community is a nonexpanding system.

Printed on recycled paper

11. Page 3-4, 3-16, and 3-17. **Please provide written documentation of discussions with the Fire Marshal for this system's fire suppression storage requirements.**

    The revision was made. Documentation of the Fire Marshal correspondence regarding fire suppression storage requirements is located in Appendix H.

12. Page 3-5. The language in the last paragraph indicates that treatment for iron and manganese is necessary. **Please clarify that treatment facilities are in operation for iron, manganese, and arsenic.**

    The revision was made. The following sentence was added: "The Community currently has iron and manganese treatment facilities in operation. Arsenic treatment facilities have been approved by DOH and will be constructed by year's end."

13. Page 3-10. **Please update the discussion on arsenic to include the arsenic treatment facilities and the preliminary rates of arsenic removal.**

    On page 3-10, the following sentence was added: "Arsenic treatment facilities have been approved by DOH, and will be constructed by the end of 2008. Preliminary rates of arsenic removal yield results well under the MCL of 0.01 mg/L."

14. Page 3-22. **Please describe if the hydraulic model indicated that looping or specific distribution system improvements could result in acceptable fireflow at some of the 13 substandard hydrants.**

    Upgrading the 4-inch piping in the system to 6 inches would result in acceptable fire flow at all but one of the substandard hydrants. Looping the line from Hydrant 10 to the line at Hydrant 52 with 150 feet of 6-inch pipe would result in acceptable fire flow at Hydrant 10.

15. Page 6-4. **Please clarify if the portable propane generator can power Well #1 as well as its treatment facilities.**

    The following sentence was added: "The generator is capable of powering Well No. 1 and its treatment facilities."

Printed on recycled paper

16. Page 6-7. Emergency Response Program. **Please provide an emergency contact list with the names and contact numbers for important private and government personnel in case of emergencies.** Please see the enclosed emergency contact list example.

    An emergency contact list has been included in Appendix M. On page 6-7, the following sentence was added: "An emergency contact list is located in Appendix M."

17. Page 6-10. Please refer to WAC 246-290-490(3) and review the cross connection control program (CCCP) regarding the required elements of a CCCP. **Please indicate which elements of the CCCP have been implemented; for those that have not yet been implemented, please provide a schedule for their completion.**

    On page 6-11, the following sentence was added: "All elements of the CCCP have been implemented in the Community of Hartstene Pointe. The devices are tested annually in September."

18. Page 6-11. Appendix O states that backflow prevention devices exist at the WWTP and the Community Center. The 2007 sanitary survey indicates all three commercial connections have backflow prevention devices. **Please clarify, state when the existing devices will next be tested, and when or if a device will be installed at the marina. Also, please state when the Cross Connection Control survey (Appendix O) was last mailed to residents, or will be mailed to residents.**

    Cross connection control devices are located at the WWTP, Community Center, and the Marina. On page 6-11, the following sentence was added: "All elements of the CCCP have been implemented in the Community of Hartstene Pointe. The devices are tested annually in September, and the latest survey was mailed with the 2007 consumer confidence report in June 2008."

19. Page 6-12. ODW supports and encourages documentation of water system operations noted in the last 9 bullets. **Please describe if additional staff or resources are needed to accomplish these important tasks.**

    On page 6-12, the following sentence was added: "The Community has indicated that they can adequately perform all operations and maintenance tasks with the six certified operators that the County has on staff for operation of its water and sewer system."

Printed on recycled paper

20. Chapter 8. Relatively minor discrepancies in project cost estimates exist between the Appendix R information and this chapter. **Please amend or explain these discrepancies.**

    The following sentence was added: "The detailed preliminary cost estimates in Appendix R were generated prior to 2008. Thus, the values are slightly lower than the estimates provided in this chapter. The previous project costs in Appendix R were converted to 2008 dollars for the CIP."

21. Page 8-2. It appears that Project TR-1 has essentially been completed. **If so, it can be removed from this page and from Tables 8-1 and 9-8.**

    The arsenic treatment for Well No. 2 has been approved by ODW, but has not yet been constructed. This project will remain in the CIP.

22. Table 9-9. A negative cash flow is projected to begin in 2009. A balanced budget must be included prior to approval of this WSP. **Please revise.**

    The revision was made with the addition of PWTF.

23. Page 9-11. A negative cash flow is projected to begin in 2009. The Summary states an outside funding source is required to fund the Capital Improvement Program (CIP). However, it is not certain that such outside funds, especially grant money, can be obtained in the next few years. **An increase in water rates (beyond the rate of inflation) should be considered.** In addition, the cost for implementing Project M-1 ($592,400 for installing all service meters) is placed entirely in 2009; service meter installation could be phased-in over a longer time period (see P. 4-2). **This possibility should be included in possible alternatives to fund the CIP.**

    The revisions were made. A positive cash flow is projected through the 6-year planning period. A PWTF loan has been incorporated to pay for the meter installation. The service meters will be installed in five phases.

24. Appendix E. **The most recent Consumer Confidence Report and Water Quality Monitoring Report should be included in this section.**

    The CCR and Water Quality Monitoring Report have been added to Appendix E.

Printed on recycled paper

25. Appendix F. This WSP references the Coliform Monitoring Plan (CMP) is included in Appendix F, but it was not. **Please provide a CMP that contains a map indicating the location and addresses of the routine sampling locations and the locations and addresses of follow up testing sites.**

    The CMP is now included in Appendix F and contains the sampling map and testing locations.

26. Appendix J, Water Conservation, was submitted with no contents. **Please enclose the SEPA determination.**

    Per the preplanning meeting, no SEPA is required with this WSP submittal since the system has fewer than 1,000 connections.

27. Appendix P. In Drawings 2 and 3, please note that a minimum depth of fill over the distribution pipe is 36 inches. In Drawings 8 and 9 please ensure that sufficient room above the concrete collar is provided for removal of bolts and nuts from the hydrants. Also, it is suggested that terms such as "or equivalent" is provided as is appropriate for construction standards (see "Eclipse Model No. 88 Sampling Station in Drawing 16). **Please include this information.**

    Appendix P drawings have been modified.

28. Appendix S. The WSP Checklist says that a SEPA determination is provided in this appendix, but it is not. **Please enclose the SEPA determination.**

    Per the preplanning meeting, no SEPA is required with this WSP submittal since the system has fewer than 1,000 connections.

29. A copy of the 2007 sanitary survey report for this system is enclosed for your use and information. **Please include the following information in the revised WSP:**

    - The minor repairs at the two wellheads have been completed.
    - The surface drainages connect to the same outlet pipe as the system's reservoir.

- The possible contaminants have been removed from the electrical outlet shed next to S01.

On page 1-7, the following sentence was added: "Minor repairs at the two wellheads have been completed since the last Plan."

On page 1-9, the following sentence was added: "The possible contaminants have been removed from the electrical outlet shed next to SO1 since the last Plan."

On page 1-10, the following sentence was added: "Surface drainage connects to the same outlet pipe as the steel reservoir."

30. Other Documentation. This system must meet the consumer input process outlined in WAC 246-290-100(8). **Please include documentation of a consumer meeting discussing this WSP, prior to ODW approval.**

The Community has made plans to have a public meeting before the end of 2008 and will notify DOH when this meeting occurs.

Please contact the undersigned if you have any questions regarding our responses to your comments or the tasks we have identified for incorporation into the City's Water System Plan Update.

Very truly yours,

GRAY & OSBORNE, INC.

Ken Alexander, P.E.

KCA/hhj

cc: Mr. Tom Moore, Deputy Director, Utilities and Waste Management, Mason County Public Works Department w/encl
Mr. Harry Sellers, P.E., Gray & Osborne, Inc., Seattle w/encl

Printed on recycled paper

HARTSTENE POINTE

MASON COUNTY **WASHINGTON**

WATER SYSTEM COMPREHENSIVE PLAN

KENNETH C. ALEXANDER
STATE OF WASHINGTON
30026
REGISTERED
PROFESSIONAL ENGINEER

8-18-08

G & O #06513

AUGUST 2008

Gray & Osborne, Inc.
CONSULTING ENGINEERS
701 DEXTER AVENUE NORTH SUITE 200
SEATTLE, WASHINGTON 98109 • (206) 284-0860

TABLE OF CONTENTS

CHAPTER 1 – WATER SYSTEM DESCRIPTION
INTRODUCTION 1-1
GOALS 1-1
WATER SYSTEM OWNERSHIP AND MANAGEMENT 1-2
SYSTEM BACKGROUND 1-2
History of Water System Development and Growth 1-2
Project Description 1-3
Natural Features of the Service Area 1-3
Geography and Climate 1-3
Soils and Geology 1-3
Site Sensitive Areas 1-4
Adjacent Purveyors 1-5
INVENTORY OF EXISTING FACILITIES 1-5
Source of Supply 1-5
Water Treatment 1-7
Storage 1-9
Telemetry 1-10
Transmission and Distribution 1-11
RELATED PLANNING DOCUMENTS 1-11
WATER SERVICE AREA CHARACTERISTICS 1-12
Existing Service Area 1-12
Zoning and Land Use 1-12
Service Area Agreements 1-12
Policies 1-12
Cross-Connection Control Program 1-13
POLICY FOR DEALING WITH COMPLAINTS 1-13
Record Keeping 1-13

CHAPTER 2 – BASIC PLANNING DATA
INTRODUCTION 2-1
CURRENT WATER SYSTEM DEMANDS 2-1
Historical Community Population 2-1
Total Service Connections 2-1
Water Use 2-2
Production History 2-2
Consumption History 2-3
Lost and Unaccounted for Water 2-3
Equivalent Residential Units 2-4
FUTURE POPULATION AND WATER DEMANDS 2-5
Projected Land Use 2-5
Projected Future Population 2-5
Projected Non-Residential Water Needs 2-6
Water Demand Forecasting 2-6

Water Rates 2-8
Price 2-8

CHAPTER 3 – SYSTEM ANALYSIS

OBJECTIVE 3-1
SYSTEM DESIGN STANDARDS 3-1
Water Quality Parameters 3-2
Projected Demands 3-2
Storage Requirements 3-2
Fire Flow Rate and Duration 3-4
WATER QUALITY ANALYSIS 3-4
Source Water Quality 3-5
Inorganic Chemical and Physical Water Quality 3-5
Volatile and Synthetic Organic Chemical Water Quality 3-7
Radionuclides 3-7
Delivered Water Quality 3-7
Coliform Bacteria Monitoring 3-8
Distribution System Chlorine Residual Monitoring 3-8
Disinfectant Byproduct Monitoring 3-8
Asbestos 3-9
Arsenic 3-9
Lead and Copper 3-10
Water Quality Reporting 3-11
Water Quality Complaints 3-12
SYSTEM DESCRIPTION AND ANALYSIS 3-12
Sources 3-12
General Description and Condition 3-12
Source Capacity Analysis 3-12
Water Rights 3-13
Water Treatment 3-13
Storage 3-14
Existing Effective Storage 3-14
Effective Storage Requirement 3-14
SYSTEM ANALYSIS 3-18
Distribution System Analysis 3-18
Hydraulic Modeling Software 3-18
Model Assumptions 3-18
Model Calibration 3-19
Model Input 3-21
Peak Hour Demand Modeling Results 3-21
Fire Flow Modeling Results 3-21
SYSTEM CAPACITY SUMMARY 3-23
SYSTEM DEFICIENCIES AND PROPOSED IMPROVEMENTS 3-23
Water Quality Monitoring 3-23
Stage 2 D/DBP Requirements – 6-Year Planning Horizon 3-23

Source 3-23
Well Rehabilitation – 20-Year Planning Period 3-23
Storage 3-24
Booster Pump Station at Reservoir – 6-Year Planning Period 3-24
Distribution System 3-24
Water Service Meters – 6-Year Planning Horizon 3-24
Color Code Fire Hydrants – 6-Year Planning Period 3-24
Leak Detection Test – 6-Year Planning Horizon 3-24
Treatment 3-24
WTP Improvements – 6-Year Planning Period 3-24
WTP Environmental Control – 20-Year Planning Horizon 3-25
Telemetry 3-25
WTP Control System – 6-Year Planning Horizon 3-25

CHAPTER 4 – CONSERVATION PROGRAM
INTRODUCTION 4-1
CONSERVATION PLANNING REQUIREMENTS 4-1
Water Use Efficiency Rule 4-1
Source Description 4-2
WATER USE DATA REPORTING 4-3
CONSERVATION PROGRAM DEVELOPMENT AND LEVEL OF IMPLEMENTATION 4-3
Required Measures for All Systems 4-3
Source Meter Installation 4-4
Program Promotion 4-4
Leak Detection and Repair Program 4-4
Recommended Measures 4-4
Service Meters 4-5
Water Conservation Kits 4-5
Conservation Pricing 4-5
Customer Class 4-7
Conservation Objectives and Plan 4-7
WATER DEMAND FORECAST 4-7
Grants for Water Conservation Measures 4-8
Loans for Water Conservation Measures 4-8
WATER USE 4-8

CHAPTER 5 – SOURCE WATER PROTECTION
INTRODUCTION 5-1
WELLHEAD PROTECTION PROGRAM 5-1
Program Development and Implementation 5-1
SUSCEPTIBILITY ASSESSMENT 5-2
WELLHEAD PROTECTION AREA 5-2
Analysis 5-4
CONTAMINANT SOURCE INVENTORY 5-5
Potential Contaminant Sources 5-5

Land Use and Zoning 5-5
Landfills 5-6
Commercial and Industrial Activity 5-6
Underground Storage Tanks 5-7
Clandestine Drug Labs 5-9
Septic System 5-9
Drywells, Catch Basins, and Improperly Sealed and Secured Wells 5-9
Accidental Spills 5-9
Confirmed and Suspected Contaminated Sites 5-10
Summary of Potential Contaminant Sources 5-11
Inventory Data Sources 5-11
NOTIFICATION OF FINDINGS 5-12
SPILL RESPONSE PLANNING 5-12
CONTINGENCY PLANNING 5-14
Existing Capacity 5-14
Water Rights 5-14
Interties 5-15
Recommendations 5-15

CHAPTER 6 – OPERATION & MAINTENANCE PROGRAM

OBJECTIVE 6-1
WATER SYSTEM MANAGEMENT AND PERSONNEL 6-1
Operator Certification 6-1
PROFESSIONAL GROWTH REQUIREMENTS 6-2
SYSTEM OPERATION AND CONTROL 6-3
Identification of Major System Components 6-3
PREVENTATIVE MAINTENANCE 6-3
Source of Supply 6-4
Treatment Plant 6-5
Storage 6-5
Distribution System 6-5
Meters 6-6
Existing Meter Reading System 6-6
Manual Reading System 6-6
Automated Meter Reading Systems 6-6
INVENTORY OF MATERIALS 6-7
EMERGENCY RESPONSE PROGRAM 6-7
Vulnerability Analysis and Emergency Procedures 6-7
Contamination of the Water Supply 6-8
Bacteriological Presence Detection Procedure 6-8
IOC, VOC, and SOC Detection Procedures 6-9
Power Failure 6-9
Severe Earthquake 6-9
Fire 6-10
Mitigation Recommendations 6-10

CROSS-CONNECTION CONTROL PROGRAM 6-10
New and Existing Cross-Connection Devices 6-11
RECORD KEEPING AND REPORTING 6-12
Water Treatment Plant 6-12
OPERATION & MAINTENANCE IMPROVEMENTS 6-12

CHAPTER 7 - DISTRIBUTION FACILITIES DESIGN & CONSTRUCTION STANDARDS
OBJECTIVE 7-1
PROJECT REVIEW PROCEDURES 7-1
SYSTEM STANDARDS, POLICIES AND PROCEDURES 7-2
CONSTRUCTION CERTIFICATION AND FOLLOW-UP PROCEDURES 7-3

CHAPTER 8 - CAPITAL IMPROVEMENT PROGRAM
INTRODUCTION 8-1
CAPITAL IMPROVEMENT PLAN 8-1
Storage 8-1
ST-1: Booster Pump Station 8-1
Treatment Plant 8-2
TR-1: Arsenic Treatment Modifications 8-2
TR-2: Stage 2 D/DBP Rule Requirements 8-2
TR-3: WTP Environmental Control 8-2
TR-4: WTP PLC System Upgrade 8-2
TR-5: WTP Improvements 8-2
Distribution System 8-3
D-1: Color Code Fire Hydrants 8-3
D-2: Leak Detection Test 8-3
D-3: Pipe Replacement 8-3
Meters 8-3
M-1: Water Service Meter Installation 8-3
Source 8-4
SO-1: Well Rehabilitation 8-4
Capital Improvement Summary and Schedule 8-4

CHAPTER 9 - FINANCIAL ANALYSIS
INTRODUCTION 9-1
FINANCIAL STATUS OF EXISTING WATER UTILITY 9-1
Current Water Rates 9-1
Historical Financial Operations 9-1
PROJECTED OPERATING REVENUES AND EXPENSES 9-3
Projected Capital Revenues and Expenditures 9-4
AVAILABLE FUNDING SOURCES 9-5
Community Development Block Grant (CDBG) 9-5
Public Works Trust Fund (PWTF) 9-6
Community Economic Revitalization Board (CERB) 9-7

Drinking Water State Revolving Fund (DWSRF) 9-8
USDA Rural Development, Rural Utility Services (RUS) – Water and Wastewater 9-9
Revenue Bonds – Water and Wastewater 9-9
General Obligation Bonds – Water and Wastewater 9-10
Summary 9-10

LIST OF TABLES

No.	Table	Page
1-1	Projects Completed Since 1998 Comprehensive Water System Plan CIP	1-3
1-2	Water Rights	1-7
1-3	Pipe Length and Size	1-11
2-1	Hartstene Pointe Historical Population	2-1
2-2	Hartstene Pointe Historical Water Service Connections	2-2
2-3	Source Water Production	2-2
2-4	Hartstene Pointe Historical Average and Maximum Day Production	2-3
2-5	OFM Population Projections for Mason County	2-5
2-6	Hartstene Pointe Population and Service Connection Projections	2-6
2-7	Projected Water Production	2-7
2-8	Monthly Water Rates and Connection Charges	2-8
3-1	Hartstene Pointe Inorganic Chemical Sampling Results (All Results mg/L unless otherwise noted)	3-6
3-2	Hartstene Pointe Volatile Organic Chemical Sampling Results	3-7
3-3	Hartstene Pointe Arsenic Monitoring Results	3-10
3-4	Hartstene Pointe Monitoring Requirements	3-11
3-5	Hartstene Pointe Projected Water Demands and Source Capacity	3-13
3-6	Reservoir Characteristics	3-14
3-7	Total Storage Requirements	3-17
3-8	Hydrant Testing Locations	3-20
3-9	Calibration Results	3-20
3-10	Reservoir Levels During Model Scenarios	3-21
3-11	Available Fire Flow	3-22
3-12	Water Facility Customer ERU Capacity	3-23
4-1	Water Use Efficiency Requirement: 15-999 Connections	4-2
4-2	Summary of Water Use Data Collection	4-3
4-3	Monthly Water System Base Rate	4-7
5-1	Hartstene Pointe Maximum Annual Pumping Volumes	5-4
5-2	Hartstene Pointe Wellhead Protection Zones of Contribution (CFR Method)	5-5
5-3	Chemicals Associated with Commercial and Industrial Activities	5-7
5-4	Potential Contaminant Sources within the Hartstene Pointe Wellhead Protection Area	5-11
6-1	Water System Group Classification	6-2
6-2	Hartstene Pointe Water System Personnel Certifications	6-2
6-3	Summary of Preventative Maintenance Activities	6-4
6-4	Bacteriological Contamination Response Procedures	6-8
6-5	Power Outage Response Procedures	6-9
6-6	Earthquake Response Procedures	6-10
7-1	Hartstene Pointe Construction Standard Details	7-2
8-1	Hartstene Pointe Summary of Capital Improvement Projects	8-4
9-1	Water Base Rates	9-1

9-2 Historical Operating Revenues 9-2
9-3 Historical Operating Expenditures 9-2
9-4 Historical Cash Flows 9-2
9-5 Projected Operating Revenues 9-3
9-6 Projected Operating Expenditures 9-3
9-7 Summary Projected Operating Cash Flow 9-4
9-8 Projected Capital Expenditures 9-4
9-9 Projected Capital Cash Flow Summary 9-5

LIST OF FIGURES

No. **Table** **On or Follows Page**

1-1 Vicinity Map 1-1
1-2 Water System Facilities 1-2
1-3 Study Area and Zoning 1-2
1-4 Topography 1-3
1-5 Wetlands 1-3
1-6 Flood Plains 1-3
1-7 Well No. 1 1-6
1-8 Well No. 2 1-6
1-9 Well No. 2 Treatment Plant 1-8
1-10 Well No. 1 Treatment Plant 1-8
1-11 Steel Reservoir 1-10
3-1 Effective Storage Explanation 3-3
3-2 Available Fire Flow 3-22
5-1 Zone of Contribution 5-5
6-1 Coliform Bacteria Procedures 6-9
6-2 Inorganic Chemical Detection Procedure 6-9
6-3 Volatile Organic Chemical Detection Procedure 6-9

APPENDICES

Appendix A – WFI
Appendix B – Water Rights Certificate
Appendix C – Hartstene Pointe Rules and Regulations
Appendix D – Customer Complaint Form
Appendix E – Water Quality Report and Testing Results
Appendix F – Coliform Monitoring Plan
Appendix G – Water Rights Self Assessment
Appendix H – Water System Modeling Results
Appendix I – Getting Started: Water Use Efficiency Guidebook
Appendix J – Water Conservation Brochures
Appendix K – Susceptibility Assessment Survey Forms
Appendix L – Sample Spill Response Notification Letter
Appendix M – Maintenance Records and Emergency Contact List
Appendix N – Boil Water Notice
Appendix O – Cross Connection Control Program and Resolution
Appendix P – Construction Standards
Appendix Q – Construction Completion Report
Appendix R – Preliminary Cost Estimates
Appendix S – DOH Documents

EXECUTIVE SUMMARY

The Mason County: Hartstene Pointe Comprehensive Water System Plan (Plan) provides a long-term planning strategy for the County's water utility over the 6- and 20-year planning periods. The Plan has been prepared consistent with Department of Health requirements as specified in the Washington Administrative Code (WAC) Chapter 246-290. The Plan represents a commitment by the County to pursue and implement the Plan's recommendations and capital improvements.

PLAN SUMMARY

Chapters 1 and 2 of the Plan provide background data, including a description of existing facilities, service area, service area policies, and projections of population and water use through 2028. Chapter 3 provides a summary of the County's design standards, and provides an analysis of the County's source of supply, treatment, storage, and distribution system utilizing the hydraulic model. Chapter 4 provides a description of the County's conservation program, and Chapter 5 summarizes the County's watershed control program. Chapter 6 presents a brief summary of the Communities operation and maintenance program. Chapter 7 includes the County's design and construction standards at Hartstene Pointe. Chapter 8 presents the planned capital improvements, and Chapter 9 presents financing for the planned improvements. The nine chapters of this Plan are followed by appendices that contain backup documentation.

STUDY AREA

The study area for this Plan includes the residential recreational community of Hartstene Pointe within Mason County. The Community is located at the northern tip of Hartstene Island.

POPULATION AND WATER USE PROJECTIONS

The Communities water service has 442 connections and serves a population at 1,082 as of 2007. Based on population growth rates established by historical growth trends, and County projections, the Communities water service population is expected to grow to approximately 1,330 people at the 20-year planning period in 2028. Hartstene Pointe is a closed community and therefore has a limited growth area. The build-out population is dependant on the number of available lots within the Community. Build-out is expected by the year 2014.

The Communities source of supply is ground water from two wells. Chapter 3 of the Plan determines the existing source, storage, and water right capacities in terms of Equivalent Residential Units (ERUs). The average day production from August 2006 divided by the number of connections gives an estimate of the ERU value, 228 gpd/ERU. However, the residential connections within the Community of Hartstene Pointe are not

metered. Thus, the ERU estimate assumes zero lost and unaccounted for water, uniform consumption among single-family, multi-family, and non-residential connections, and year round usage from seasonal customers. In this Plan, we have assumed that the number of connections is essentially equal to the number of ERUs within the system, 442. There are only eight connections within the Community that are not residential. Table E-1 summarizes the capacity of the facilities within Hartstene Pointe in terms of ERUs.

TABLE E-1

Water Facility Customer ERU Capacity

Component	Total ERU Capacity
Source	819
Water Rights, Qi	1,642
Treatment	829
Storage	124
2007 Existing ERUs	442
2012 Projected ERUs	497
2026 Projected ERUs	497

The limiting factor for the overall capacity of the system is the storage reservoir. There is not adequate storage to support the existing customers. To remedy this problem a booster station is proposed for the 6-year capital improvement plan. All other components of the system have sufficient capacity to serve Hartstene Pointe through the 20-year planning period.

CAPITAL IMPROVEMENT PLAN

The Plan contains a list of projects for the County's capital improvement plan at Hartstene Pointe for the 6- and 20-year planning horizons. A summary of the CIP is shown below in Table E-2.

TABLE E-2

Hartstene Pointe Summary of Capital Improvement Projects

No.	Title	Year	Project Cost
D-1	Color Code Fire Hydrants	2008	$ 1,300
D-2	Leak Detection Test	2008	$ 2,000
TR-1	Arsenic Treatment Plant	2008	$ 20,100
TR-2	Stage 2 D/DBP Rule Requirements	2008	$ 20,100
M-1	Water Service Meters – Phase I	2008	$ 192,400
TR-3	WTP Environmental Control	2009	$ 13,100
M-1	Water Service Meters – Phase II	2009	$ 100,000
M-1	Water Service Meters – Phase III	2010	$ 100,000
TR-4	WTP PLC System Upgrade	2011	$ 12,600
M-1	Water Service Meters – Phase IV	2011	$ 100,000
TR-5	WTP Improvements	2012	$ 71,400
M-1	Water Service Meters – Phase V	2012	$ 100,000
ST-1	Booster Pump Station	2010	$ 272,500
6-Year Capital Improvement Total			**$1,005,500**
SO-1	Well Rehabilitation	2018	$ 24,100
D-3	Pipe Replacement	2025	$3,200,000
20-Year Capital Improvement Total			**$3,224,100**
Complete Capital Improvement Total			**$4,229,600**

CHAPTER 1

WATER SYSTEM DESCRIPTION

INTRODUCTION

In accordance with Washington Administrative Code (WAC) 246-290-100 and the Washington State Department of Health (DOH), water system plans need to be updated every 6 years or more frequently, if necessary, to reflect the current conditions of the water system. This Plan has been prepared to update the 1998 Hartstene Pointe *Water System Comprehensive Plan* (Water System Plan) using the DOH Water System Design Manual, August 2001, and the DOH Water System Planning Handbook, April 1997 as the primary references.

The purpose of this Plan is to assist the Mason County Department of Utilities and Waste Management, which operates the water utility for the community of Hartstene Pointe, in developing long term planning strategies. The Plan that follows evaluates the existing water system and its ability to meet the anticipated State and Federal requirements for water source, quality, transmission, distribution, and storage. This Plan will evaluate the system capacity into the six and twenty year planning period, 2014 and 2028 respectively.

The community of Hartstene Pointe is located on the north end of Hartstene Island about 15 miles northeast of the City of Shelton. A vicinity map showing Hartstene Pointe is included as Figure 1-1.

GOALS

Water system planning is essential to good management of a water system. This water system plan has been prepared to meet the following objectives.

- Ensure efficient use of available water resources.
- Coordinate planning efforts for growth and development with available water resources.
- Document existing system infrastructure and identify current and future system needs.
- Provide information that will help to ensure that safe, high quality drinking water is delivered to existing and future system customers.
- Ensure reliable service during all conditions of operation.

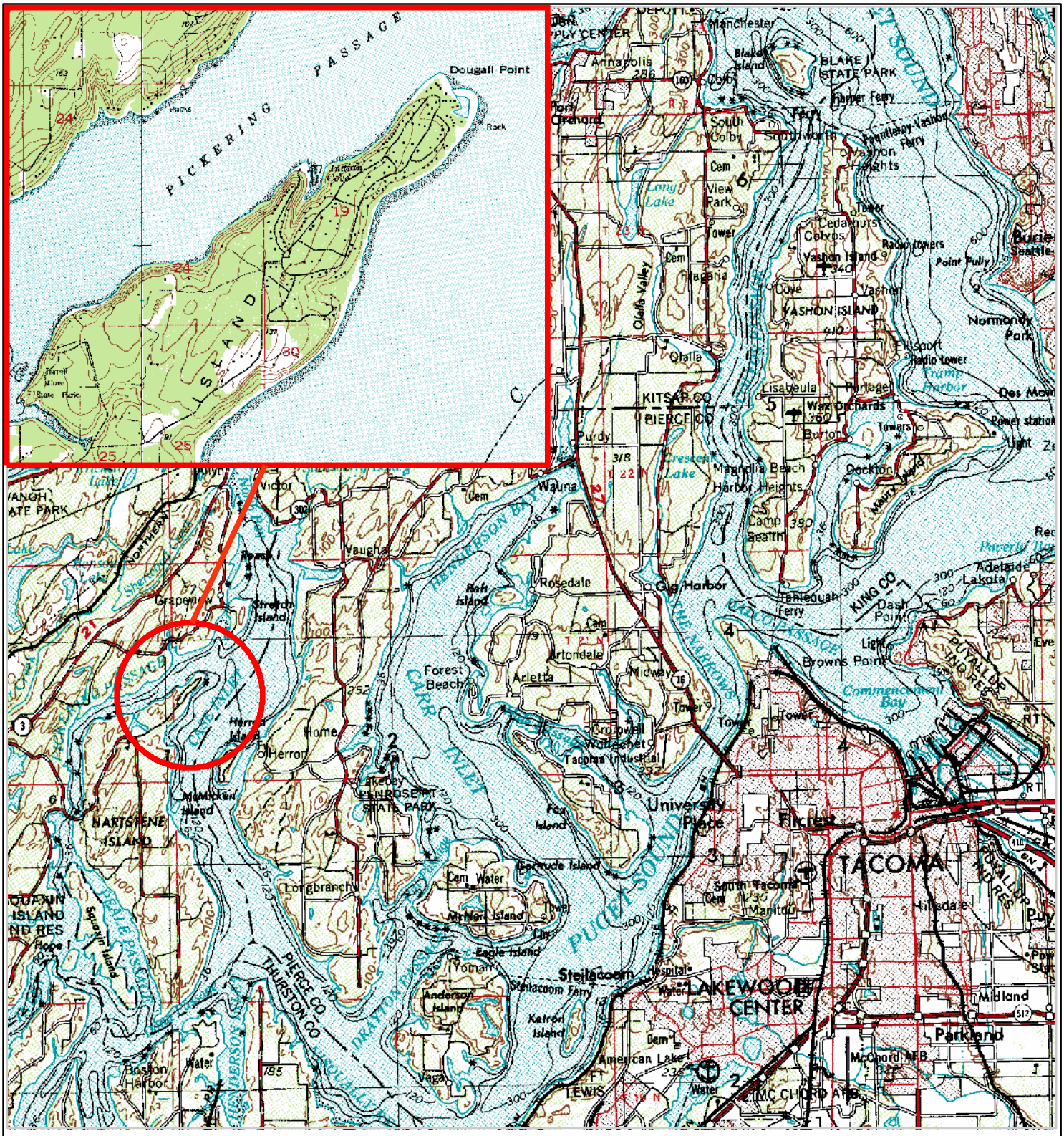

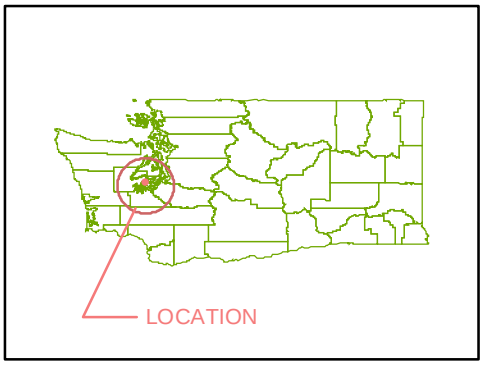

N

HARTSTENE POINTE

WATER SYSTEM PLAN UPDATE
FIGURE 1-1
LOCATION MAP

Gray & Osborne, Inc.
CONSULTING ENGINEERS

CONSULTING ENGINEERS

MSEIDEL D:\GIS\MASONCO\HARTSTENE_POINTE\LOCATION.MXD

WATER SYSTEM OWNERSHIP AND MANAGEMENT

Per the DOH Water Facilities Inventory (WFI), the name of the system is "Hartstene Pointe" and the water system identification number is 315690. A copy of the WFI is included in Appendix A.

Hartstene Pointe is a residential recreational community in Mason County. The water system that serves this community is owned and operated by the Mason County Department of Utilities and Waste Management. The property owners in the community pay a monthly water fee to the County. The current mailing address for the water system is:

Mason County Utilities and Waste Management
410 North 4th Street
P.O. Box 578
Shelton, Washington 98584
Ph. (360) 427-9670 ext. 270

Waterworks operator certification, regulated under WAC 246-292, dictates that public water systems in Washington State with more than 100 services retain in their employment individuals who are certified, by examination, as competent in water supply operation and management.

SYSTEM BACKGROUND

HISTORY OF WATER SYSTEM DEVELOPMENT AND GROWTH

The Hartstene Pointe community was built by the Quadrant Corporation in the early 1970s. The community is served by a water system which is owned and operated by the Mason County Department of Utilities and Waste Management. Figure 1-2 shows the water system facilities. Figure 1-3 shows the system study area and zoning.

The steel storage reservoir and two wells that serve the community have been in use since the early 1970s. Well No. 1 is located south of the Community Center and was constructed in 1970. Water from Well No. 1 is pumped directly into the treatment building located adjacent to the well. The greensand filtration treatment was put online in 1995. Well No. 2 is located north of the Community Center and was installed in June 1976 as an attempt to located better quality water than Well No. 1. An additional well was drilled during the same period as Well No. 2, but was abandoned because the water quality showed no improvement to that of Well No. 1 or No. 2. The water from Well No. 2 is pumped directly into a second treatment facility located adjacent to the well. The greensand filtration for the second well was installed in 1971.

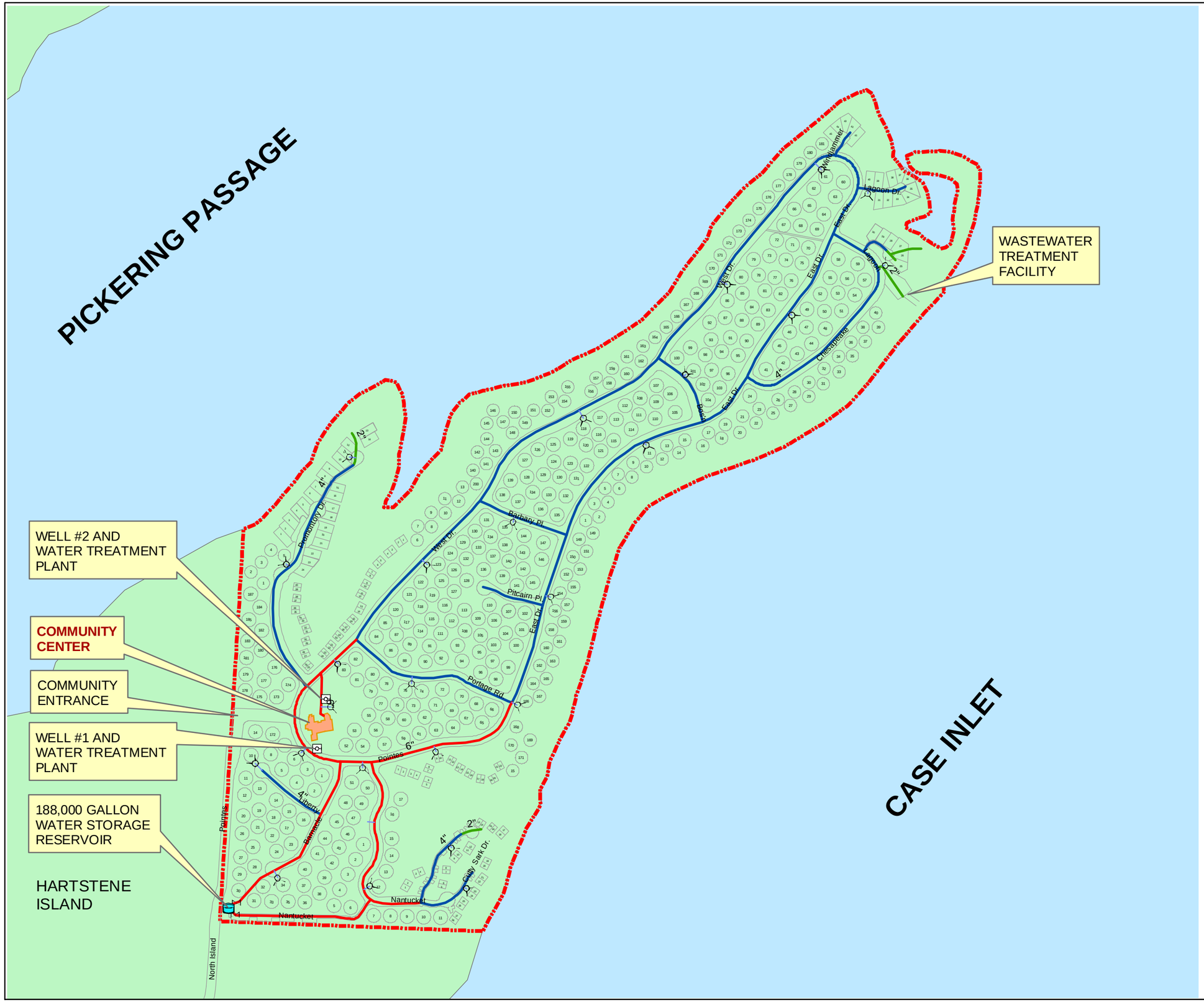

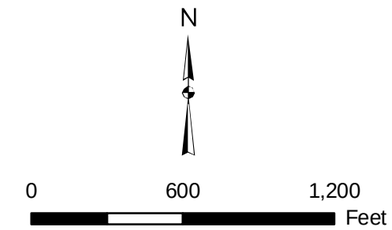

LEGEND:

COMMUNITY BOUNDARY

WATERLINES:

- 2-INCH
- 4-INCH
- 6-INCH
- SERVICE LINE
- HYDRANTS
- VALVES

HARTSTENE POINTE

WATER SYSTEM PLAN UPDATE
FIGURE 1-2
WATER SYSTEM FACILITIES

Gray & Osborne, Inc.
CONSULTING ENGINEERS

CONSULTING ENGINEERS

MSEIDEL D:\GIS\MASONCO\HARTSTENE_POINTE\WATR_SYS.MXD

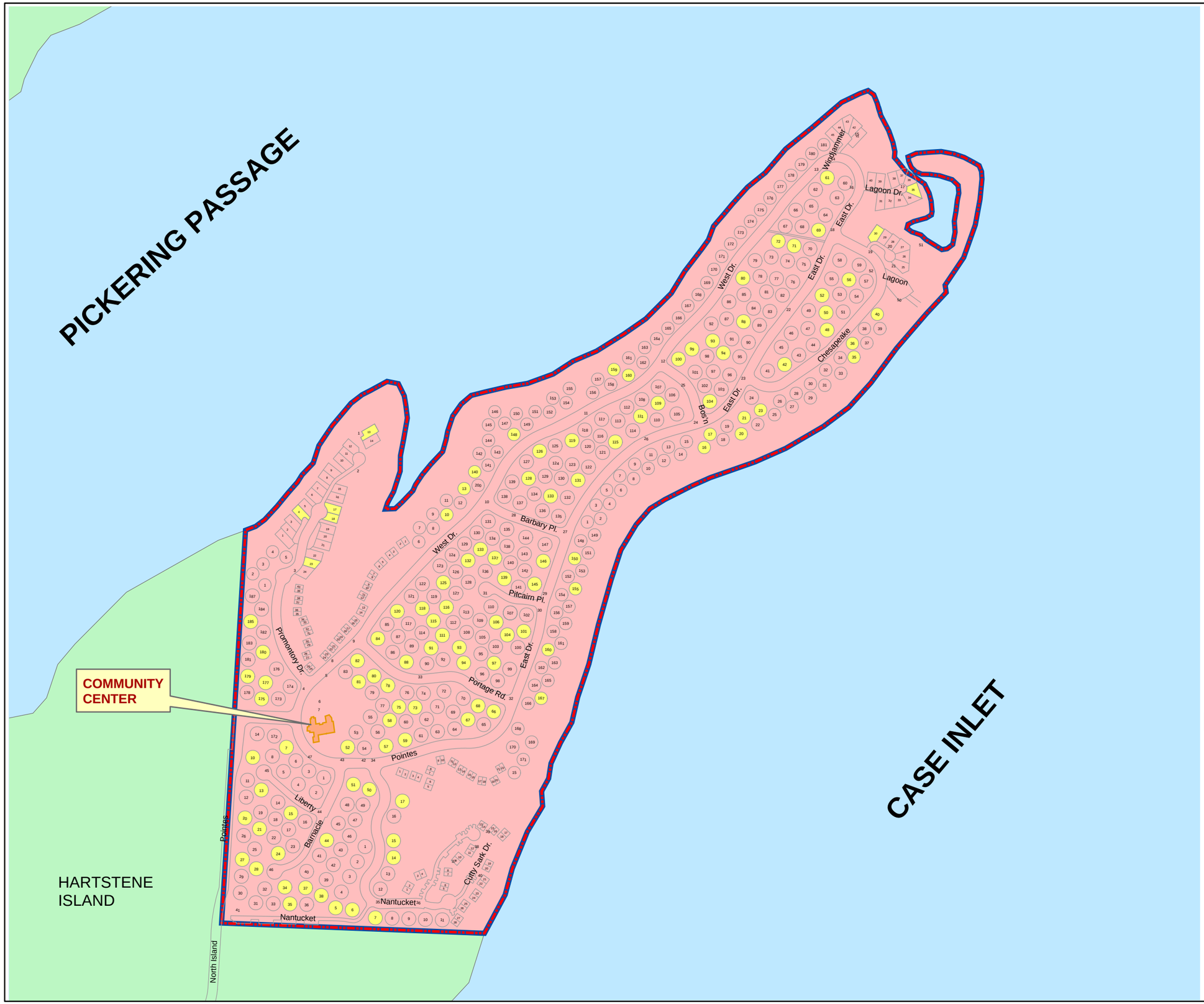

N

0 600 1,200 Feet

LEGEND:

COMMUNITY BOUNDARY

WATER SERVICE AREA/RETAIL SERVICE AREA

ZONING:

RESIDENTIAL

VACANT LOT

HARTSTENE POINTE

WATER SYSTEM PLAN UPDATE
FIGURE 1-3
STUDY AREA AND ZONING

Gray & Osborne, Inc.
CONSULTING ENGINEERS

CONSULTING ENGINEERS

MSEIDEL D:\GIS\MASONCO\HARTSTENE_POINTE\ZONING.MXD

Table 1-1 provides the projects listed in the Capital Improvement Plan (CIP) included in Hartstene Pointe's 1998 *Comprehensive Water System Plan* and identifies the status of each project.

TABLE 1-1

Projects Completed since 1998 Comprehensive Water System Plan CIP

Project No.	Project Description	Status
1	Install portable propane generator at Well No. 1	Completed
2	Replace chemical feed pump at Well No. 2	Completed
3	Install water service meters at community center and wastewater treatment plant	Installed at Community Center Only
4	Paint all system fire hydrants	Not done
5	Inspect and paint interior and exterior of reservoir	Completed
6	Install diesel powered booster pump at reservoir	Not done

Projects not completed will be included in the updated CIP in Chapter 8.

NATURAL FEATURES OF THE SERVICE AREA

Geography and Climate

The community of Hartstene Pointe is located at the northeast tip of Hartstene Island in unincorporated Mason County. Hartstene Island is located in the Case Inlet watershed. Pickering Passage borders Hartstene Pointe on the west side and Case Inlet provides a border on the east. The remainder of the Island is primarily undeveloped and includes a state park located at Jarrel's Cove. Figure 1-4 shows the area topography for the community. Elevations range from 130 feet above sea level in the southwest corner of the community, to 10 feet in the northeast by the wastewater treatment facility. Hartstene Island has cool summers with an average high of 77.6 degrees F in July. Winters are typically mild and wet, yielding an average monthly low of 31.7 degrees F in January. Annual rainfall averages 65 inches, ranging from 0.8 inches in July to 10.4 inches in January.

Soils and Geology

The underlying geology of the Hartstene Community is predominantly Sinclair soil which is a very gravely and sandy loam. This soil type is dense and has a high risk of corrosion in combination with uncoated steel and concrete. The area also contains Kitsap soil, a silty clay loam.

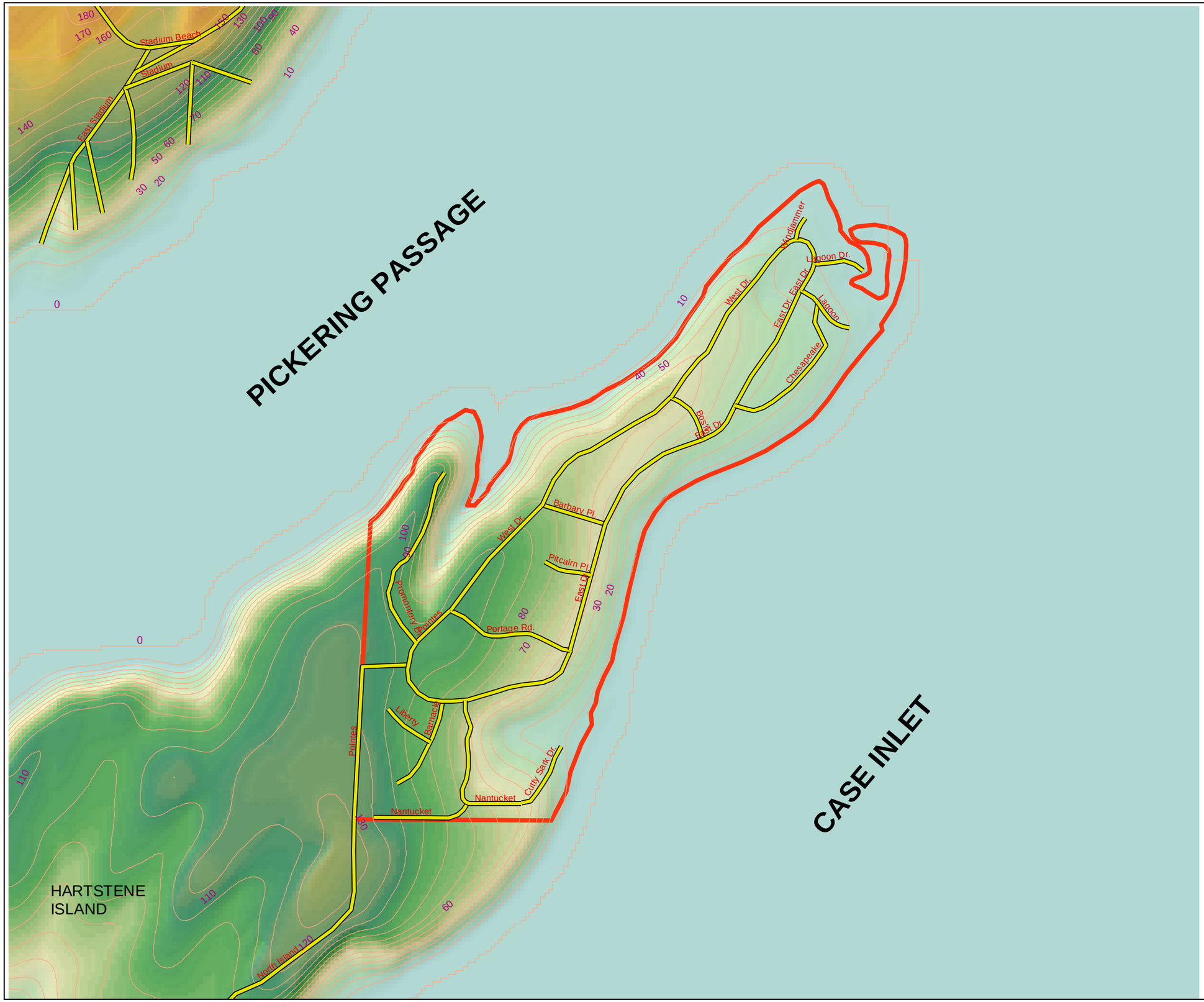

N

0 800 1,600 Feet

LEGEND:

COMMUNITY BOUNDARY

10' CONTOURS - USGS

ELEVATION:

High : 192 FEET

Low : 0 FEET

HARTSTENE POINTE

WATER SYSTEM PLAN UPDATE
FIGURE 1-4
TOPOGRAPHY MAP

Gray & Osborne, Inc.
CONSULTING ENGINEERS

CONSULTING ENGINEERS

MSEIDEL D:\GIS\MASONCO\HARTSTENE_POINTE\TOPO.MXD

N

0 800 1,600 Feet

LEGEND:

COMMUNITY BOUNDARY

SOIL CODES:

E1OWL: [E] Estuarine, [1] Subtidal,
[OW] Open Water/Unknown Bottom (obs), [L] Subtidal

E2USN: [E] Estuarine, [2] Intertidal, [US] Unconsolidated Shore,
[N] Regularly Flooded

E2AB/USN: [E] Estuarine, [2] Intertidal, [AB] Aquatic Bed / ,
[US] Unconsolidated Shore, [N] Regularly Flooded

PABH - [P] Palustrine, [AB] Aquatic Bed, [H] Permanently Flooded

POWH - [P] Palustrine, [OW] Open Water/Unknown Bottom (obs),
[H] Permanently Flooded

HARTSTENE POINTE

WATER SYSTEM PLAN UPDATE
FIGURE 1-5
WETLANDS MAP

Gray & Osborne, Inc.
CONSULTING ENGINEERS

CONSULTING ENGINEERS

MSEIDEL D:\GIS\MASONCO\HARSTENE_POINTE\WETLANDS.MXD

N

0 800 1,600 Feet

LEGEND:

COMMUNITY BOUNDARY

FEMA FLOOD ZONES:

A - AN AREA INUNDATED BY 100 YEAR FLOODING, FOR WHICH NO BFE'S HAVE BEEN ESTABLISHED

HARTSTENE POINTE

WATER SYSTEM PLAN UPDATE
FIGURE 1-6
FLOOD ZONES MAP

Gray & Osborne, Inc.
CONSULTING ENGINEERS

CONSULTING ENGINEERS

MSEIDEL D:\GIS\MASONCO\HARSTENE_POINTE\FLOODPLAIN.MXD

Site Sensitive Areas

Site sensitive areas within the water service area include those classified as seismic hazard areas, flood hazard areas, wetlands, and surface waters. Wetlands and floodplain areas within the water service area are shown in Figures 1-5 and 1-6, respectively, and are described further below.

Seismic Hazard Areas

Seismic hazard areas are those with low-density soils that are more likely to experience greater damage due to seismic-induced subsidence, liquefaction, or landslides. Seismic hazard areas are regulated mainly with respect to public safety and with the exception of potential damage due to an earthquake.

Wetlands

EPA defines wetlands as areas that are inundated with water for at least part of the year. The US Fish and Wildlife Service defines wetlands as those areas that have characteristics such as hydrophyte plants, hydric soils, and frequent flooding. Wetlands support valuable and complex ecosystems and consequently development is severely restricted if not prohibited in most wetlands. The National Wetlands Inventory map identifies wetlands in Hartstene Pointe that follow the shoreline of Hartstene Island; Figure 1-5 illustrates the wetlands within the community. The wetlands within the service area are classified as Estuarine, Intertidal, and Unconsolidated Shore Wetlands.

Flood Hazard Areas

Flood hazard areas are areas adjacent to lakes, rivers, and streams that are prone to flooding during peak runoff periods. Flood hazard areas deserve special attention due to the sensitive nature of their ecosystems as well as the potential for damage to structures located within the floodplain.

Typically, construction in flood hazard areas is not allowed or is limited to specific activities. Allowed activities might be mining or gravel extraction, recreational uses, repair to existing structures, utility and road construction, or limited to uses dependent upon water such as docks, wharves, and boating activities.

The 100-year and 500-year floodplains in the vicinity of Hartstene Pointe are shown on Figure 1-6. The floodplains are associated with Case Inlet and Pickering Passage.

Surface Waters

Lakes and streams are classified as sensitive areas due to the variety of plants and animals that they support. The primary surface water features within or near the community is the surrounding water of Case Inlet and Pickering Passage.

Fish and Wildlife Habitat

Fish and wildlife habitat is defined as areas essential for maintaining specifically listed species in suitable habitats. This definition was provided in "Fish and Wildlife Habitat Critical Area" section of WAC 365-190-080(5). The WAC further states that any proposed activity within 300 feet of these areas requires the preparation of a habitat assessment. This assessment is circulated to all the appropriate agencies for review. After agency review, a Habitat Management Plan may be required to address the impacts the project would have on habitat, provide background information of specific species, and recommend protection and mitigation measures for those species.

After project implementation, an assessment and evaluation of the success of the identified measures is required. This plan is again circulated to the appropriate agencies for review. Minimum buffers from the critical habitat area may be required. As the main watercourse in the area, the habitat and water quality surrounding Hartstene Point is of particular concern.

Fish and wildlife observed in the area includes Puget Sound Chinook, Puget Sound Bulltrout, Chinook Salmon, shellfish, eagle, hawk, songbirds, ducks, and deer.

Vegetation

The dominant tree species in the community includes fir, cedar, and pine. Wet soil plants are found in the area and include cattail, buttercup, bulrush, and skunk cabbage. Other water plants found in the area are the water lily, eelgrass, and milfoil.

ADJACENT PURVEYORS

There are no other public water systems adjacent to the community of Hartstene Pointe. There are approximately 35 private wells on the Island, including one well which serves the state park, and one well which serves the Fire District No. 5 fire department.

INVENTORY OF EXISTING FACILITIES

SOURCE OF SUPPLY

The community of Hartstene Pointe is served by Well No. 1 and Well No. 2 that have submersible well pumps with capacities of 75 gpm and 100 gpm, respectively.
Figure 1-7 is a photograph of Well No. 1. Well No. 1 has a 6-inch-diameter casing that is 170-feet deep with a screen depth of 180 feet below ground level.

FIGURE 1-7

Well No. 1

Figure 1-8 is a photograph of Well No. 2. Well No. 2 has an 8-inch-diameter casing, which is 152-feet deep with a screen depth of 162 feet.

FIGURE 1-8

Well No. 2

The static water level of Well No. 1 is approximately 115 feet below the top of the well and Well No. 2 is approximately 117 feet below the top of the well. Minor repairs at the two wellheads have been completed since the last Plan.

Table 1-2 lists the water rights currently held by Mason County for the two wells that serve the community of Hartstene Pointe. Two water rights certificates have been issued. Copies of the water rights documentation are provided in Appendix B. In 1964, a Report of Examination was conducted for Well No. 1. The water right certificate, which followed, Certificate No. C2-01016C, designated 44 acre-feet per year and 110 gpm for Well No. 1. In 1974, a report of examination was conducted for Well No. 2. The report of examination indicated that the application for water rights may be approved for 150 gpm on a continuous basis and 240 acre-feet per year; 223 acre-feet being a primary right and 17 acre-feet being supplemental to Certificate No. C2-01016C, provided that the total withdrawal under all rights not exceed 267 acre-feet per year.

TABLE 1-2

Water Rights

Source	Certificate Number	Priority Date	Maximum Instantaneous Withdrawal	Maximum Annual Withdrawal
Well No. 1	C2-01016C	(1)	110 gpm	44 acre-feet per year
Well No. 2	G2-23123C	September 5, 1974	150 gpm	240 acre-feet per year(2)

Notes: (1) There is no priority date listed on the water right certificate. The report of examination is dated 1964.

(2) 223 acre-feet per year are primary and 17 acre-feet per year are supplemental to Certificate No. C2-01016C, with the total withdrawal under all rights not to exceed 267 acre-feet per year.

WATER TREATMENT

Both of the community's wells exceed the Washington State Maximum Contaminant Levels for iron and manganese of 0.3 mg/L and 0.05 mg/L, respectively. Water from Well No. 2 is treated with a Northwest Filter Greensand package water treatment plant, which was constructed in 1971. Well No. 2 exceeded the arsenic MCL and has an Office of Drinking Water (ODW) approved treatment system scheduled for construction in 2008. See Figure 1-9 for photos of the Well No. 2 treatment plant.

FIGURE 1-9

Well No. 2 Treatment Plant

Water from Well No. 1 is also treated with greensand filtration, and was constructed in 1995 after increasing system demand necessitated the use of both wells. See Figure 1-10 for photos of the Well No. 1 treatment plant.

FIGURE 1-10

Well No. 1 Treatment Plant

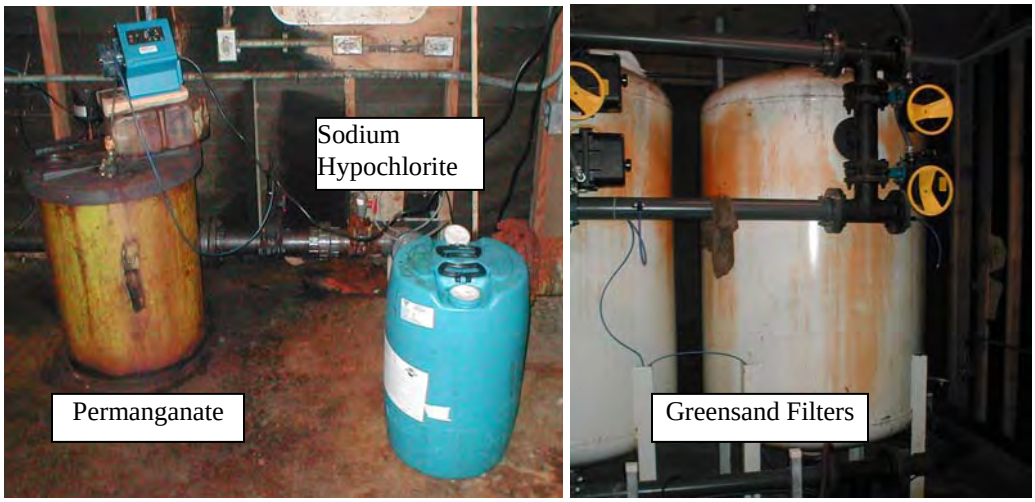

The capacities of the greensand filtration plants are 100 gpm for Well No. 2 and 75 gpm for Well No. 1.

The greensand filtration process requires the addition of potassium permanganate before filtration through greensand filter media. The potassium permanganate oxidizes the iron in the groundwater to an insoluble form which can be removed by the filter. The manganese in the groundwater adsorbs to the greensand filter media where it is also oxidized by the potassium permanganate. The manganese oxide compounds form an outer layer on the greensand filter media, which allows additional adsorption of sodium hypochlorite and potassium permanganate, in lieu of straight potassium. The sodium hypochlorite is cheaper than the potassium permanganate and will oxidize the iron manganese. It is also a common practice to add a combination, thereby reducing the amount of potassium permanganate required.

The possible contaminants have been removed from the electrical outlet shed next to SO1 since the last Plan.

Treatment plant backwash is initiated by either a preset headloss through the filters or a preset timer. Backwash water is supplied from the system and discharged into the sanitary sewer. The RUGID Programmable Logic Controller (PLC) prevents backwashing of both filter plants at the same time.

STORAGE

The existing storage facility that serves the community of Hartstene Pointe is a steel reservoir, with a capacity of approximately 188,000 gallons that was constructed in 1973. Figure 1-11 shows a photograph of the reservoir.

FIGURE 1-11

Steel Reservoir

The existing grade at the reservoir site is 129 feet above mean sea level. The diameter of the reservoir is approximately 20 feet and has an overflow of 79 feet above grade, or an elevation of 208 feet. The reservoir is in good condition; the interior and exterior were cleaned and repainted in 2002. Repairs and seismic reinforcement were completed after the Nisqually earthquake of 2001. Although the capacity of the reservoir is approximately 188,000 gallons, in order to maintain a minimum of 30 psi at the highest points in the distribution system, only the top 12 feet, or 28,203 gallons of storage can be considered usable storage. Surface drainage connects to the same outlet pipe as the steel reservoir.

TELEMETRY

A RUGID PLC currently operates the existing Well No. 1 pump based on the water depth in the 188,000-gallon reservoir. A Northwest Filter PLC is installed on the existing Well No. 2 pump. When the water level in the reservoir reaches 76 feet, Well No. 2 is called on. When the water level reaches 75 feet, Well No. 1 is called on. The low level alarm in the reservoir is set at 74 feet. The PLC on Well No. 2 is outmoded and is difficult to

find replacement parts. A replacement PLC, similar to the RUGID on Well No. 1 is recommended and discussed in more detail in Chapter 8.

TRANSMISSION AND DISTRIBUTION

The transmission lines serving Hartstene Pointe from the water treatment facilities are 6-inch-diameter pipe, while the majority of the distribution pipe in the community is 4-inch-diameter pipe. The system was originally constructed with AC pipe, however, PVC pipe is being used as portions of the system are replaced. However, the majority of the distribution system remains AC pipe. Table 1-3 provides the approximate length of pipe in the system along with the number of fire hydrants.

TABLE 1-3

Pipe Length and Size

Pipe Diameter	Approximate Length of Pipe in System (lineal feet)	Number of Fire Hydrants
2 inch	845	2
4 inch	16,690	15
6 inch	5,904	8
Total	**23,440**	**25**

The Hartstene Pointe distribution system does not include service meters on any of the residential connections. There are only two service meters in the system, located at the Community Center and the Marina. Both meters are read sporadically. Water service meter installation will be addressed in the CIP in Chapter 8.

RELATED PLANNING DOCUMENTS

The following documents were consulted in the preparation of this Plan:

Hartstene Pointe Water System Comprehensive Plan, December 1998.

The 1998 Water System Plan was prepared by Gray & Osborne. This Plan is an update of the 1998 Plan.

Mason County Comprehensive Plan, November, 2005.

The Mason County Comprehensive Plan states goals for the future of the County that have either been identified by the citizens or specified in the Growth Management Act. The Plan looks at the impacts of growth in the County through

the year 2014. The major sections of the Plan include planning goals, planning policies, land use, housing, capital facilities, utilities, and transportation.

Hartstene Pointe Water System Improvements Well No. 1 Treatment Project,

The Well No. 1 Treatment Project report was completed as a predesign analysis for a new water treatment plant at Well No. 1. Both wells have iron and manganese concentrations that exceed the Washington State maximum contaminant levels. The report discusses treatment alternatives, provides design criteria for the chosen alternative of greensand filtration, describes system operation, and provides cost estimates for the project that was completed in 1995.

WATER SERVICE AREA CHARACTERISTICS

EXISTING SERVICE AREA

The existing water service area includes the entire community of Hartstene Pointe, which encompasses approximately 232 acres. A total of 428 out of 533 lots have been developed on the Island. The locations of occupied lots and vacant lots are illustrated in Figure 1-3. An occupied lot may or may not have a water service connection. According to the WFI, there are 442 total service connections, and the Community is approved to serve 497 connections. There are no plans to extend water service area.

ZONING AND LAND USE

Hartstene Island, where the community of Hartstene Pointe is located, is an unincorporated area of Mason County. Land use within the community of Hartstene Pointe is restricted by the Hartstene Pointe Maintenance Association in Article IV of the Rules and Regulations.

SERVICE AREA AGREEMENTS

The community of Hartstene Pointe does not currently have any service area agreements with any areas outside the development.

POLICIES

Water system policies for Hartstene Pointe are included in the Community's Compilation of Rules and Regulations, which was adopted and published by the Hartstene Pointe Maintenance Association on May 21, 1983. A copy of this document is included in Appendix C. The Hartstene Pointe Maintenance Association is a non-profit corporation under the laws of the State of Washington for the purpose of providing and maintaining roads, recreational facilities, sanitary sewer, and drinking water supply for Hartstene Pointe. The Rules and Regulations dictate that all platted residential lots shall be used for single-family residential purposes only, and that there shall be no water wells on platted

residential lots. Landowners desiring water service must connect to the existing water system, which is owned and operated by the Mason County Department of Community Development. Operators of the water, sanitary sewer, power, and telephone systems serving Hartstene Pointe shall have a nonexclusive easement for the purposes of operation, maintenance, improvement, and repair of the utility that cross some of the platted residential lots. In addition to regular annual fees, special fees can be levied by the Hartstene Pointe Maintenance Association to be used for capital improvements.

CROSS-CONNECTION CONTROL PROGRAM

The adopted Cross-Connection Control Program and Resolution for the Community of Hartstene Pointe is based on WAC 246-290-490 and the American Water Works Association Cross-Connection Control Manual. The CCCP is located in Appendix O. Cross-connection control is discussed in greater detail in Chapter 6, Operations and Maintenance.

POLICY FOR DEALING WITH COMPLAINTS

The community of Hartstene Pointe rarely gets complaints. When they do, they are handled seriously and on an individual basis. A complaint form is located in the Community Center for customers to submit their complaints. A copy of this form is located in Appendix D.

RECORD KEEPING

Water production is measured at the treatment plant at each of the wells and recorded on a monthly basis.

CHAPTER 2

BASIC PLANNING DATA

INTRODUCTION

Basic planning data is an essential component of a Water System Comprehensive Plan. The objective of this chapter is to present basic planning data and water demand forecasts needed to assess the current and future capabilities of the water system to provide service. This chapter provides information on the existing population and future population projections, water use data, service connections, and water demand associated with the planning element known as an equivalent residential unit (ERU). The chapter also includes projected land use and water demands for 6- and 20-year planning periods. These time frames will extend to 2012 and 2026, respectively, consistent with the planning period of this Plan.

CURRENT WATER SYSTEM DEMANDS

HISTORICAL COMMUNITY POPULATION

The Community of Hartstene Pointe is a recreational residential community where approximately 418 of 532 lots are currently developed. The estimated population is 1045 people based on an average of 2.5 people per developed lot. Approximately 35 percent of the population is permanent residents, while the remainder of the population is seasonal. Table 2-1 summarizes the population of Hartstene Pointe from 1998 to 2005.

TABLE 2-1

Hartstene Pointe Historical Population

Year	Population	Growth Rate
1998(1)	862	-
2002(2)	529	
2005(3)	1045	3.0%

(1) Data from 1998 Water System Comprehensive Plan
(2) Data from 2002 DOH Water System Inspection Report
(3) Data based on 2.5 persons per developed lot

TOTAL SERVICE CONNECTIONS

The existing number of water service connections is approximately 442, and the Community is approved by DOH to serve 497 connections. The existing number of connections are single-family residential connections with the exception of eight

connections that include recreational services, the wastewater treatment facility, and the Hartstene Pointe Community Center. Table 2-2 lists the water service connections by customer class from 1998 to 2007.

TABLE 2-2

Hartstene Pointe Historical Water Service Connections

Year	Water Service Connections			
	Permanent Residence			
	Single-Family	Multi-Family	Public	Total
1998(1)	333	-	2	335
2002(2)	373	-	8	381
2005(3)	297	90	8	395
2007(4)	344	90	9	442

(1) Data from 1998 Water Comprehensive Plan
(2) Data from 2002 DOH Water System Inspection Report
(3) Data from 2005 WFI
(4) Data from 2007 WFI

Note that multi-family connections in Hartstene Pointe are not apartment buildings, but town homes serving only two families.

WATER USE

Production History

Water production is metered at each of the wells. Meter readings are taken every month. Currently, the community does not have individual service meters to measure consumption. Table 2-3 provides a summary of the total volume of water produced by each source from 2002 through 2006.

TABLE 2-3

Source Water Production

Year	Total Production [gallons]		
	Well #1	Well #2	Total
2002	6,545,200	5,687,500	12,233,700
2003	6,403,600	8,719,100	15,122,700
2004	6,735,200	18,074,300	24,809,500
2005	3,766,100	19,218,700	22,984,800
2006	3,309,400	22,328,500	25,637,900

The maximum quantity of water produced in a 24-hour period is known as the maximum day production. Table 2-4 provides the average day production, maximum day production, and the ratio of the maximum day to average day production for the years 2002 through 2006. Daily production data is not available, therefore, the maximum day production values were estimated based on the maximum monthly pumping records.

TABLE 2-4

Hartstene Pointe Historical Average and Maximum Day Production

Year	Average Day Production (gpd)	Maximum Day Production (gpd)	Maximum Day Peaking Factor
2002	33,500	64,900	1.94
2003	41,400	114,500	2.77
2004	68,000	138,100	2.03
2005	63,000	78,000	1.24
2006	70,200	102,800	1.46
		Average	**1.89**

Note: (1) Maximum Day Production values estimated from maximum monthly pumping records.

The maximum day peaking factor has varied between 1.24 and 2.77, with an average of 1.89. A maximum day peaking factor of 1.89 will be used to project future maximum day production throughout the Plan.

Based on 2006 production records and population estimates, the average production per capita for that year is 67.3 gpcd. In 2005 the average production per capita was 60.3 gpcd. Due to lack of data for years between 1999-2001 and 2003-2004, for planning purposes, a value of 62 gpcd will be assumed as was done in the 1998 Plan.

Consumption History

Hartstene Pointe is not equipped with service meters at any connections within the water system. Therefore, consumption history is not available for this system.

Lost and Unaccounted for Water

Lost and unaccounted for water is defined as the difference between metered source production and metered consumption. Lost water includes any water loss due to leaks or unauthorized uses such as illegal service connections. Unaccounted for water may result from accounting errors, inaccurate source and customer meters, and water leaving the system for unmetered usage such as flushing of mains and fire flows. Currently there are no individual service meters, so lost and unaccounted for water cannot be calculated for this system. The Community repairs leaks in the system as they are discovered, however, no records of the repairs are maintained.

This plan does not have the capability to address lost and unaccounted for water due to the lack of consumption data. Consumption data is not available because the distribution system is not metered.

Equivalent Residential Units

The concept of Equivalent Residential Units (ERUs) is a way to express water use by non-residential customers as an equivalent number of residential customers. ERUs are calculated by dividing the total volume of water utilized in the single-family customer class by the total number of residential connections. The volume of water used by the other customer classes can then be converted to an equivalent number of residential services. However, because the majority of customers in the Community are seasonal residents, water usage from August will be used. This consumption number from 2006 provides a reasonably accurate view of the peak month water usage by the entire Community. The average day production from August 2006 divided by the number of connections gives an estimate of the ERU value, 228 gpd/ERU. Applying the maximum day peaking factor yields a maximum demand per ERU of 431 gpd/ERU. These estimates assume no distribution system leakage, and uniform consumption among single-family, multi-family, and non-residential connections.

However, since Hartstene Pointe consists of almost entirely single-family residential connections, and there are currently no service meters, the number of ERUs is essentially equal to the total number of service connections, 442. Until all services are metered, it is not possible to accurately determine ERU's for this system.

Actual water usage at the Community Center and Wastewater Treatment Plant are not currently available. However, water usage at the Community Center and Wastewater Treatment Plant is not estimated to be significantly more than one equivalent residential connection. Water usage at the Community Center is limited to two restroom facilities and one kitchen. The Center is staffed by two part-time employees and is used for occasional meetings and events. Water use at the Community Center is estimated to be less than 60 gallons per day. Water usage at the Wastewater Treatment Plant is limited to the restroom facility and the water used during the chlorination process. Estimates by Plant staff indicate that the facility uses less than 1,000 gallons per day. Water usage at the metered commercial connections should be recorded on a regular basis to help detect any unusually high usage or loss.

FUTURE POPULATION AND WATER DEMANDS

PROJECTED LAND USE

Hartstene Island is in an unincorporated area of Mason County. The community of Hartstene Pointe is a residential development and there are no plans for future expansion or changing the existing land use that is restricted by the Hartstene Pointe Maintenance Association in Article IV of the Rules and Regulations.

PROJECTED FUTURE POPULATION

The Office of Financial Management forecasts future population for each county planning under the Growth Management Act. Table 2-5 provides projected county population for Mason County for low growth, intermediate growth, and high growth scenarios.

TABLE 2-5

OFM Population Projections for Mason County

	Mason County Population Forecast					
	Low Projection		Intermediate Projection		High Projection	
Year	Population	Percent Change	Population	Percent Change	Population	Percent Change
2005	50,158	-	53,789	-	58,899	-
2010	53,037	1.15%	58,604	1.79%	66,750	2.67%
2015	56,166	1.18%	64,007	1.84%	75,720	2.69%
2020	59,190	1.08%	69,635	1.76%	85,442	2.57%
2025	61,760	0.87%	75,088	1.57%	95,434	2.34%
2030	63,634	0.61%	80,043	1.32%	105,257	2.06%
Average Growth		**1.07%**		**1.74%**		**2.57%**

Average growth does not include 2030 population projection.

For purposes of the Plan, the Community's population growth is projected at 1.74 percent per year.

The community of Hartstene Pointe has 532 lots, all of which are owned and approximately 428 are currently occupied. The current number of connections in the system is 442, and is approved by DOH to serve 497 connections. The number of approved connection limits the growth of the Community; build-out is expected by the year 2014, assuming a growth rate of approximately 1.74 percent per year. The growth rate used in this Plan is based on Mason County population projections shown in the Table above. Table 2-6 shows the projected population and service connections based on

this growth rate. At build-out, it is estimated that the total population served by the water system will be 1,330.

TABLE 2-6

Hartstene Pointe Population and Service Connection Projections

Year	Projected Population[(1)]	Projected Number of Service Connections[(1)]
2006	1063	432
2007	1082	442
2008	1100	450
2009	1020	458
2010	1242	465
2011	1159	474
2012	1179	482
2013	1200	490
2014[(2)(3)]	1220	497
2028[(4)]	1330	497

(1) Projection based on a growth rate of 1.74 percent per year.
(2) 6-year planning horizon.
(3) Build out.
(4) 20-year planning horizon.

PROJECTED NON-RESIDENTIAL WATER NEEDS

The only non-residential water users served by the water system at Hartstene Pointe are the Community Center, the Wastewater Treatment Facility, and six recreational services. It is estimated that the water use at these facilities will increase proportionally to the community's population.

WATER DEMAND FORECASTING

The water production projections for the community of Hartstene Pointe were made assuming a per capita water production of 62 gpcd for planning purposes.

The maximum quantity of water produced over a one-hour period during a maximum day demand is the peak hour demand. The Community does not have precise records of peak hour demand. The DOH Water System Design Manual provides a methodology for calculating peak hour demand (PHD). The generalized equation is as follows:

$$PHD = (MDD/1440)[(C)(N) + F] + 18$$

Where:

PHD = *Peak Hourly Demand, (gallons per minute, gpm)*
C= *Coefficient Associated with Ranges of ERUs*
N= *Number of Service Connections, ERUs*
F= *Factor Associated with Ranges of ERUs*
MDD= *Maximum Day Demand, (gpd/ERU)*

The values for C and F of the peak hour demand formula are taken from the DOH *Water System Design Manual*, Table 5-1, page 5-8, and vary by the number of connections. When the number of service connection is below 500, C is equal to 1.8 and F is equal to 125. In 2014, when the number of service connections exceeds 497, C is equal to 1.6 and F is equal to 225.

Table 2-7 lists the water demand projection through the twenty-year planning horizon.

TABLE 2-7

Projected Water Production

Year	Service Connections(1)	Average Day Demand, ADD [gpd](2)	Maximum Day Demand, MDD [gpd](3)	Peak Hour Demand [gpm]
2005(4)	426	63,000	78,000	131
2006(4)	432	70,200	102,800	167
2007	442	68,500	129,500	205
2008	450	69,700	131,700	208
2009	458	70,900	134,000	211
2010	465	72,100	136,300	214
2011	474	73,400	138,700	217
2012	482	74,700	141,200	220
2013	490	76,000	143,600	223
2014(5)(6)	**497**	**77,000**	**145,500**	**225**
2028(7)	**497**	**77,000**	**145,500**	**225**

(1) Service connections are projected to increase at a rate of 1.74 percent per year. Assume service connections = ERUs.
(2) ADD projections are based on a per capita water use of 62 gpcd and 2.5 persons per connection.
(3) MDD projections are based on a peaking factor of 1.89, MDD = ADD*1.89.
(4) 2005 and 2006 data are based on actual production data.
(5) 6-year planning horizon.
(6) Build out.
(7) 20-year planning horizon.

The projected average daily water production at build-out in 2014 is estimated to be 77,700 gallons per day. With no consumption data, the level of conservation required to

reduce distribution system leakage (DSL) cannot be defined. At this time, the Community will assume a conservation goal of 1 percent reduction of DSL per year.

WATER RATES

The water rates and connection charges are outlined in Resolution No. 55-05, an amendment to Resolution No. 49-05, adopted June 7, 2005 by the board of County Commissioners of Mason County. These rates are established through the year 2008.

TABLE 2-9

Monthly Water Rates and Connection Charges

	Price
Connection Charge	$360.00
Single-Family Dwelling	$ 21.50

For connections serving more than one single-family structure, house, duplex, apartment, or mobile home, an additional $8.50 per month for each additional unit is included in the monthly water rate. Lots within the Community that have not yet connected to the water system do not receive credit toward connection to the system.

CHAPTER 3

SYSTEM ANALYSIS

OBJECTIVE

The objective of this chapter is to determine the system improvements necessary to meet water quality standards and to meet projected demands. This chapter includes the following elements: system design standards, water quality analysis, system description and analysis, summary of system deficiencies, and selection and justification of proposed improvements.

SYSTEM DESIGN STANDARDS

The Standards for planning and design of the Hartstene Pointe water system are based on commonly accepted standards including the following:

- **WAC 246-290, Group A Public Water Systems, Washington State Board of Health (July 2004).**
  This is the primary drinking water regulation used by DOH. It sets basic standards to assess capacity, water quality and system reliability.

- **Water System Design Manual, Washington State Department of Health (August, 2001).**
  These standards serve as guidance for the preparation of plans and specifications for Group A public water systems in compliance with WAC 246-290.

- **Recommended Standards for Water Works, A Committee Report of the Great Lakes - Upper Mississippi River Board of State Public Health and Environmental Manager (2003).**
  Commonly known as the Ten States Standards, this document formalizes the design standards recommended by a water supply committee representing ten Midwestern and upper Great Lake States and the Province of Ontario. The report of the Water Supply Committee was first published in 1953, and subsequently revised and published in 1962, 1968, 1976, 1982, 1992, 1997 and 2003. The report presents recommendations for both design and construction standards; however, the construction standards are somewhat general in nature with minor emphasis on materials specifications. Since surface water treatment is quite common in the Midwest and Upper Great Lakes, the Committee report tends to concentrate on water treatment plant design and operation.

- **Standard Specifications for Road, Bridge and Municipal Construction, Washington State Department of Transportation, American Public Works Association (2004).**
  These standards include detailed specifications for materials and workmanship of a wide variety of public works projects, including installation of public water supply facilities.

WATER QUALITY PARAMETERS

Mason County owns and operates a public water supply system regulated by the Washington State Department of Health Drinking Water Regulations, WAC 246-290, the latest edition of which is dated July 3, 2004, as well as sections of Code of Federal Regulations (CFR) Title 40, Parts 141 and 143, adopted by reference in WAC 246-290. The Community's water source consists of groundwater wells so ground water supply regulations apply. Where one standard may be more stringent than the other, such as in maintenance of a distribution system disinfection residual, the more stringent standard will apply.

PROJECTED DEMANDS

Average day, maximum day, and peak hour demands are developed in Chapter 2. The average day demand per ERU has been estimated to be 228 gpd and the maximum day demand per ERU is 431 gpd. Projected demands are summarized in Table 2-7.

STORAGE REQUIREMENTS

The nominal volume of a water reservoir is generally taken as the amount of water the reservoir could hold if filled all the way to the top of the reservoir wall. However, practically speaking a reservoir cannot be filled to the top of the wall and a reservoir also cannot, under normal operational conditions, be drained completely. Therefore there is a need to determine how much of a reservoir volume is *effective* storage and how much effective storage a water system needs. The DOH Water System Design Manual identifies the following components of reservoir storage volume:

- Operational Storage
- Equalizing Storage
- Standby Storage
- Fire Suppression Storage
- Dead Storage

A reservoir's effective storage volume is the nominal volume less operational storage and dead storage. This volume must be large enough to accommodate the requirements for equalizing storage, standby storage and fire suppression storage.

Operational storage is the amount of water that flows in and out of a reservoir during normal system control cycling. Reservoirs typically operate with a maximum water level at which all source pumps are turned off, and a minimum level at which all source pumps are turned on. The amount of water that flows into and out of the reservoir between these two level depends on the particulars of the operations control levels and the dimensions of the system reservoirs.

Equalizing storage is the amount of water needed to meet peak system demand for a period of time that the system demand exceeds the system source capacity. The DOH Water System Design Manual recommends that this volume be estimated as PHD minus source capacity for 150 minutes, but not less than zero.

FIGURE 3-1

Effective Storage Explanation

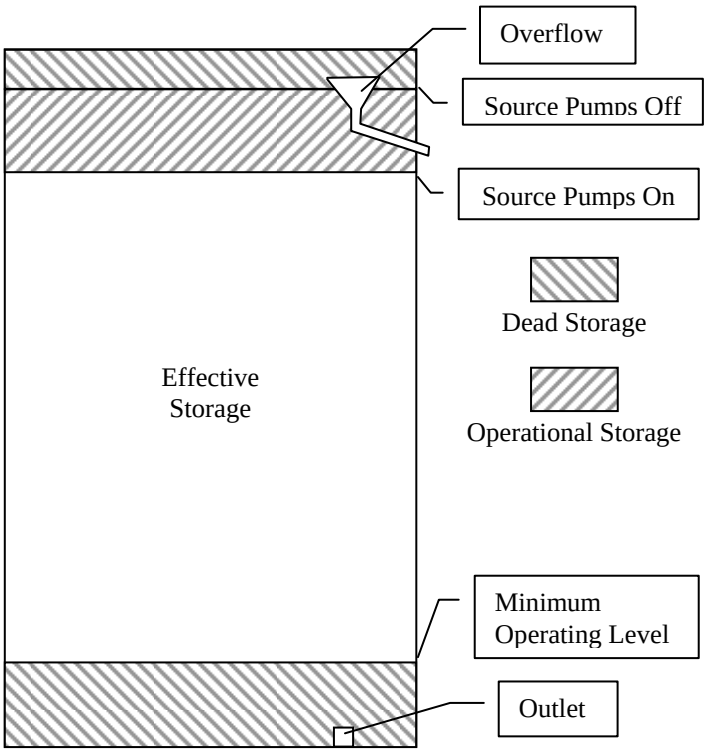

Standby Storage is water held in reserve for emergency situations, such as temporary loss of a water source. The DOH Water System Design Manual recommends that this volume be estimated as 2 days of average day demand for the water system, less the amount of water that can be produced by the water system in one day with the largest source of supply out of service, but not less than 200 gallons per ERU.

Fire Suppression Storage is the maximum fire flow standard times the maximum fire flow duration standard for the water system.

Dead storage is the volume of the reservoir that either cannot be utilized for storage because it is above the maximum operational water level of the reservoir, or cannot be withdrawn from the reservoir at the required rates while maintaining the minimum required system pressure or other required operating parameter. The amount of dead storage existing in a system depends on storage system dimensions, elevations, pumping systems, outlet design, and possibly other requirements such as disinfectant contact time.

The amount of effective storage a water system needs will be referred to as the Effective Storage Requirement. The Effective Storage Requirement is based on equalizing, standby and fire suppression storage, and will depend on whether or not "Nested Storage" is allowed. WAC 246-290-010 defines "'Nested Storage' means one component of storage is contained within the component of another." WAC 246-290-235 states, "Standby and fire suppression storage volumes may be nested with the larger of the two volumes being the minimum available, provided the local fire protection authority does not require them to be additive." Therefore, the Effective Storage Requirement will be either the sum of equalizing, standby and fire suppression, if "nesting" of standby and fire suppression storage is not allowed, or will be the sum of equalizing storage plus the greater of standby or fire suppression storage if nesting of standby and fire storage is allowed. The Hartstene Pointe storage analysis assumes that storage is not nested.

FIRE FLOW RATE AND DURATION

Based on discussion with the Mason County Fire Marshal, it has been determined that the County does not rely on the hydrants at Hartstene Pointe for fire flow. Instead, pumper trucks from Fire District No. 5 are used for firefighting purposes. However, the Fire Marshal has indicated that when distribution system improvements or pipe replacement projects are planned for the system, fire flow should be taken into consideration. Although fire protection is not currently provided by the system, fire suppression storage is considered in the storage analysis to determine if the capacity of the reservoir is adequate should the County choose to provide it in the future as upgrades are made to the system. The County fire flow standard for small communities such as Hartstene Pointe is 500 gpm for 30 minutes. Written correspondence with the Fire Marshal on the fire flow standards is located in Appendix H.

WATER QUALITY ANALYSIS

The following sections evaluate the record of water quality for the Community's water system. Water quality analysis is divided into the categories of Source Water Quality, Delivered Water Quality, Water Quality Reporting, and Water Quality Complaints. The Source Water Quality section discusses the testing results taken at Wells 1 and 2. Water

quality standards that apply to the water distributions system, including coliform, lead and copper, disinfectant byproducts and asbestos are discussed under the heading of Delivered Water Quality. A review of water quality monitoring requirements relative to water quality monitoring completed is included under the heading Water Quality Reporting and a review of water quality problems and complaints is included under the heading Water Quality Complaints.

SOURCE WATER QUALITY

As described in Chapter 1, the Community has two groundwater wells as its source of supply and the treatment provided is greensand filtration. Issues regarding chlorination are addressed under the heading Delivered Water Quality.

Inorganic Chemical and Physical Water Quality

Inorganic chemical and physical (IOC) water quality monitoring results are summarized in Table 3-1. Most of the data is indicated as less than (<) a number. This means that the chemical was below the detection limit of the laboratory analytical method, and the indicated number is the detection limit. Inorganic chemical and physical parameters that were detected are indicated in bold. The Maximum Contaminant Level (MCL) for all inorganic chemical and physical water quality parameters for which there are MCL's listed in the right hand column. A majority of the detected chemicals and physical parameters are below the MCL. The high levels of iron and manganese at the source indicate that a treatment system is necessary. The arsenic MCL was triggered by the sample taken from Well 2 in 2007. Hartstene Pointe has received IOC waivers for both wells for 2004. The Community currently has iron and manganese treatment facilities in operation. Arsenic treatment facilities have been approved by DOH and will be constructed by the year's end.

TABLE 3-1

Hartstene Pointe Inorganic Chemical Sampling Results
(All results mg/L unless otherwise noted)

Location	**Well 1**	**Well 2 Wellhouse**	**MCL**
Sample Date	**7/19/06**	**9/19/07**	
Arsenic	0.010	**0.030**	0.01
Barium	<0.1	<0.1	2
Cadmium	<0.002	<0.002	0.005
Chromium	<0.01	<0.01	0.1
Mercury	<0.0005	<0.0005	0.002
Selenium	<0.005	<0.005	0.05
Beryllium	<0.003	<0.003	0.004
Nickel	<0.04	<0.04	0.1
Antimony	<0.005	<0.005	0.006
Thallium	<0.002	<0.002	0.002
Cyanide	<0.05	<0.05	0.2
Fluoride	0.2	0.2	4
Nitrite-N	<0.2	<0.2	1
Nitrate-N	<0.2	<0.2	10
Total Nitrite/Nitrate	<0.4	<0.4	10
Iron	**0.34**	<0.1	**0.3**
Manganese	**0.25**	**0.31**	**0.05**
Silver	<0.01	<0.01	0.1
Sulfate	2	2	250
Chloride	<1	5	250
Zinc	<0.2	<0.2	5
Sodium	10	11	None
Hardness	96	101	None
Conductivity (umhos/cm)	175	203	700
Turbidity (NTU)	0.9	0.1	1
Color (color units)	10	<5.0	15
Lead	<0.002	<0.002	None
Copper	<0.02	<0.02	None

Note: ND = No chemical detected.
Bold font indicates exceedance of MCL

Volatile and Synthetic Organic Chemical Water Quality

Laboratory reports for volatile organic chemicals (VOCs) and synthetic organic chemicals (SOCs) have been reviewed and divided into source water samples and distribution system samples. The most recent VOC testing was completed in September 2004 for Well 2, and July 2006 for Well 1. VOC testing was taken at the filter room of each well. Table 3-2 provides the VOC results; complete VOC reports are included in Appendix E.

TABLE 3-2

Hartstene Pointe Volatile Organic Chemical Sampling Results

Volatile Organic Chemical	12/01/03		9/13/04	7/19/06
	Well 1 (µg/L)	Well 2 (µg/L)	Well 2 (µg/L)	Well 1 (µg/L)
Chloroform	13.7	3.1	1.0	ND
Bromodichlor-methane	1.1	ND	ND	ND

Note: ND = No chemical detected.

The results of the VOC monitoring conducted for 2006 indicated that no MCL's were exceeded. The Mason County received SOC area waivers from the Department of Health for both Well No. 1 and Well No. 2. Mason County is required to take 1 VOC sample every 3 years.

Radionuclides

Radionuclide testing was completed on samples collected from both wells in 2005, 2006, and 2007. No radionuclides were detected in any of the samples. The water system is in compliance with the existing MCL's. Radionuclide results are included in Appendix E.

DELIVERED WATER QUALITY

Delivered water quality applies to a number of water quality monitoring requirements applied to the water distribution system. Monitoring of delivered water quality is necessary because some water quality parameters have been demonstrated to change in the distribution system, or even in the plumbing of buildings. Chlorine residual decays in the distribution system, coliform bacteria can grow or can be introduced through leaks in the distribution system, asbestos is released into the distribution system from asbestos-concrete pipes, and water that is excessively corrosive dissolves lead and copper from building plumbing. For these reasons distribution system, or delivered water quality monitoring is required. The following sections summarize delivered water quality monitoring by the County.

Coliform Bacteria Monitoring

WAC 246-290-300(3) sets distribution system coliform monitoring requirements, and WAC 246-290-310(2) sets coliform bacteria maximum contaminant levels. In general, a coliform MCL violation is when two or more coliform samples in one sampling period have detectable coliform bacteria. An Acute MCL occurs if either coliform positive sample is positive for Fecal Coliform or E. Coli, and a Non-Acute MCL is when no sample is positive for Fecal Coliform or E. Coli. Hartstene Pointe is required to take one distribution system coliform sample per month. Coliform sample results have been reviewed from November 2004 to June 2006, the results of which have been satisfactory. According to the DOH website, the only instance of coliform exceedance at Hartstene Pointe occurred in April 2003. The coliform monitoring results from June 2005 to July 2006 are included in Appendix F with the Coliform Monitoring Plan.

Distribution System Chlorine Residual Monitoring

WAC 246-290-300(7)(c) and WAC 246-290-664(6) require distribution disinfectant residual monitoring at representative points in the distribution system daily and at the same time and place as coliform sample collection, and WAC 246-290-451(3)(b) requires that a detectable disinfectant residual must be maintained in the distribution system at all times. The County samples for chlorine residual on a daily basis and submits the results to DOH regularly. All samples have indicated a detectable level of chlorine.

Disinfectant Byproduct Monitoring

Disinfectant byproduct monitoring requirements include Total Trihalomethanes (TTHM) and Haloacetic Acids (five) (HAA5). WAC 246-290-300(7)(b)(ii)(A) requires monitoring in accordance with 40 CFR 141.132(b)(1)(i). WAC 246-290-300(7)(b)(ii)(B) allows reduced monitoring with DOH approval in accordance with 40 CFR 141.132(b)(1)(ii). 40 CFR 141.132(b)(1)(i) requires 1 sample per quarter per treatment plant for systems serving 500 to 9,999 persons. 40 CFR 141.132(b)(1)(ii) allows reduction of monitoring frequency to one sample per year per treatment plant if the average annual TTHM is less than 40 μg/L and the average annual HAA5 is less than 30 μg/L. Samples are required to be taken at a point of maximum residence time in the water distribution system.

Testing for TTHM was conducted at both filter rooms in December 2003 as part of VOC monitoring presented in Table 3-2. Both locations detected chloroform, and Filter Room #2 detected Bromodichloromethane.

Implementation of the Stage 2 D/DBP Rule will require the County to meet additional monitoring requirements. As a groundwater system serving less than 10,000 persons, Mason County is on Compliance Schedule 4 Hartstene Pointe, and must comply with Stage 2 D/DBP Rule by October 1, 2013. The strategy of the new rule is to monitor locations within distribution systems that are most likely to yield high concentrations of

DBPs. The old rule aimed to monitor and minimize concentrations on average throughout distribution systems.

Schedule 4 requires the County to meet specific deadlines in order to comply with the Stage 2 D/DBP Rule. The first requirement is to submit an Initial Distribution System Evaluation Plan (IDSE Plan) to the State by April 1, 2008. The purpose of the IDSE Plan is to analyze the distribution system to predict locations of high TTHM and HAA5 concentrations. Once the IDSE Plan has been approved, the Community must perform Standard Monitoring at the locations chosen in the IDSE Plan. As a system serving less than 9,999 customers, the County will be required to take TTHM and HAA5 samples at two locations every 90 days, for one year to comply with Standard Monitoring. Standard Monitoring for the system will take place from April 2009 to March 2010. With the results from Standard Monitoring, an IDSE Report must be submitted to the State by July 1, 2010. The IDSE Report establishes the new Stage 2 D/DBP monitoring locations. Mason County will be required to take TTHM and HAA5 samples at two locations once per year for Compliance Monitoring at Hartstene Pointe. Compliance Monitoring will begin in 2013.

Asbestos

In recent years, there has been much concern with the health risks associated with asbestos. Several studies and case histories have documented the hazards to internal organs as a result of inhalation of asbestos fibers. Data is limited on the effects of ingestion of asbestos fibers or on the effects of inhalation exposure from drinking water. Ingestion studies have not caused cancer in laboratory animals, although studies of asbestos workers have shown increased rates of gastrointestinal cancer.

Asbestos is listed a primary inorganic contaminant. However, it is not routinely included in IOC samples for public water systems. Mason County last tested for asbestos at Hartstene Pointe in 1999, another sample is required by 2008.

Arsenic

Arsenic is an inorganic chemical that has received significant attention due to proposed rule revisions. Long term exposure to low concentrations of arsenic in drinking water can lead to skin, bladder, lung, or prostate cancer. Non-carcinogenic effects of ingesting arsenic at low levels include cardiovascular disease, diabetes, and anemia, as well as reproductive, developmental, immunological, and neurological effects.

An arsenic standard of 0.05 mg/L in drinking water was set by EPA in 1975, based on Public Health Service standard originally set in 1942. In March 1999, the National Academy of Sciences (NAS) completed a review of updated scientific data on arsenic and recommended that EPA lower the standard as soon as possible. Though NAS did not recommend a specific numeric level, its recommendation formed the basis for EPA's original proposal of 0.005 mg/L. During the comment period EPA also considered

potential arsenic levels of 0.003, 0.01, and 0.02 mg/L. After weighing the potential health benefit to the cost of improvements necessary to meet these new standards, the EPA selected the final arsenic MCL of 0.01 mg/L in January 2001. The new arsenic standard was published in February 2001, and was to become effective in 2004, replacing the previous standard of 0.05 mg/L. The MCL of 0.01 mg/L was reaffirmed in October 2001 and the law became effective in February 2002. Compliance with the new arsenic standard of 0.01 mg/L was required by January 2006. Table 3-3 summarizes the arsenic testing results at both of the well houses.

TABLE 3-3

Hartstene Pointe Arsenic Monitoring Results

Testing Date	Well #1 [mg/L]	Well #2 [mg/L]
7/27/2005	0.009	0.027
6/7/2006	-	0.028
7/19/2006	0.01	-
9/19/2007	-	0.03

Arsenic testing at Well #1 indicated levels at or below the MCL of 0.01 mg/L. However, tests at Well No. 2 indicate levels of arsenic well above the MCL. Arsenic treatment facilities have been approved by DOH and will be constructed by the end of 2008. Preliminary rates of arsenic removal yield results well under the MCL of 0.01 MG/L.

Lead and Copper

Based on the requirements of the EPA Lead and Copper Rule (40 CFR 141), lead and copper monitoring must be completed for two consecutive six-month monitoring periods. If lead and copper action levels are not exceeded, then the number of samples may be reduced to one-half the original number for three consecutive annual periods. Assuming compliance with the action level is maintained, reduced sampling may continue once every three years thereafter.

Ninety percent of the distribution system lead samples collected according to the procedures outlined in WAC 246-290 must have concentrations below the “Action Level” of 0.015 milligrams per liter (mg/L). Similarly, 90 percent of the copper samples must have concentrations less than 1.3 mg/L. Systems exceeding the action levels are required to provide public notification and implement a program for reducing lead and copper levels.

Lead and copper sampling conducted by the County at Hartstene Pointe in 2001 indicated that the levels were below the method detection limit, which is well below the action levels for these parameters. Samples taken in 2006 resulted in one lead sample of

0.038 mg/L which exceeds the action level of 0.015 mg/L. Subsequent testing was performed and the results were below action levels.

WATER QUALITY REPORTING

Table 3-4 summarizes the County's monitoring requirements at Hartstene Pointe as shown on the water quality monitoring report. Water quality monitoring requirements for VOCs and SOCs depend in part on the availability of monitoring waivers from the DOH.

TABLE 3-4

Hartstene Pointe Monitoring Requirements

Parameter	Sample Location	Frequency	Consequence of Exceeding Standard
Residual Disinfectant	Distribution System	Daily	Possible Treatment Modifications
Fecal Coliform	Distribution System	Monthly	Follow-up and Repeat Sampling
Routine Coliform	Distribution System	Monthly	Follow-up and Repeat Sampling
Asbestos	Distribution System	Every 9 Years - Take Next Sample by 2008	Additional Monitoring
IOCs	Source	Every 9 Years - Take Next Sample by 2010	Possible Treatment Modifications
Nitrates	Source	Annually	Possible Treatment Modifications
VOCs	Source	One sample every 3 years	Possible Treatment Modifications
SOCs	Source	Waiver granted. None required.	Possible Treatment Modifications
Lead and Copper	Distribution System	One set of 5 samples between 1/2005 – 12/2007	Additional Treatment Modifications
Radionuclides	Source	Two samples every 3 years	Possible Treatment Modifications

WATER QUALITY COMPLAINTS

The Community rarely receives complaints about water service, but when complaints are received they are taken seriously. Complaints may be filed at the Community Center where there is a form for customers to report complaints and concerns. A copy of this form is provided in Appendix D. Depending on the findings of the complaint, appropriate actions are taken to resolve the complaint.

SYSTEM DESCRIPTION AND ANALYSIS

The following sections evaluate the existing water system facilities in terms of their capacities, physical conditions and performance capabilities. Facilities are evaluated relative to existing and projected requirements based on growth and demand projections from Chapter 2.

SOURCES

As described in Chapter 1, the Community's source of supply consists of two groundwater wells. The sources have been thoroughly described Chapter 1. The following sections discuss the adequacy of the existing sources and source related facilities.

General Description and Condition

Source S-01, Well 1

Well 1 provides approximately 35 percent of the Community's water supply. Its rated capacity is 75 gpm and on average produces 16,000 gallons per day.

Source S-02, Well 2

Well 2 provides approximately 65 percent of the Community's water supply. Its rated capacity is 98 gpm and on average produces 35,400 gallons per day.

Source Capacity Analysis

The source capacity of the Community is compared to projected water system demands in this section. To evaluate source capacity against maximum day demand, it will be assumed that both wells will be operating during the high demand periods. Table 3-5 compares existing well capacity to projected water system demands. From Table 3-5 it is clear that the existing source capacity is adequate to meet projected maximum day water demands in 18 hours per day of source pumping for the twenty year projected maximum day water demands.

TABLE 3-5

Hartstene Pointe Projected Water Demands and Source Capacity

Year	Existing Source Capacity (gpd)(1)	Maximum Day Demands (gpd)(2)	Source Capacity Surplus (gpd)
2006	186,800	102,800	84,000
2007	186,800	129,500	57,300
2008	186,800	131,700	55,100
2009	186,800	134,000	52,800
2010	186,800	136,300	50,500
2011	186,800	138,700	48,100
2012	186,800	141,200	45,600
2013	186,800	143,600	43,200
2014	186,800	145,500	41,300
2019	186,800	145,500	41,300
2028	186,800	145,500	41,300

(1) Existing source capacity assumes both wells operating for 18 hours per day ((75 gpm + 98 gpm)*60 min/hour * 18 hours/day = 186,800 gallons per day).

(2) Maximum Day Demands are provided in Table 2-7.

WATER RIGHTS

A description of the County's water rights is presented in Chapter 1. The County currently holds two water rights. Well No. 1 holds a water right for 110 gpm instantaneous withdrawal and 44 acre-ft/year annual withdrawal, and Well No. 2 holds a water right for 150 gpm instantaneous withdrawal and 240 acre-ft/year annual withdrawal. The total withdrawal under all rights is not to exceed 267 acre-ft/year. According to the *Water System Planning Handbook* published by DOH, maximum instantaneous withdrawal rates and sustainable withdrawal rates must be analyzed. The Water Right Certificate is included in Appendix B, and the water right analysis required by Ecology is included in Appendix G.

The instantaneous water rights are adequate through the twenty-year planning period. The rated capacity of each well is below the instantaneous water rights. The County would also have adequate water rights to supply the system with the 2028 MDD of 145,000 gpd, or 164 acre-ft/year, over an entire year.

WATER TREATMENT

A detailed description of the Community's greensand filtration process is presented in Chapter 1. The capacities of the greensand filtration plants are 75 gpm for Well No. 1, and 100 gpm for Well No. 2. The capacity of the filtration plants is equal to or greater than the source capacity of the wells. From the source capacity analysis, it is clear that

the capacity of the filtration plants will be able to meet the MDD at the 20-year planning horizon.

STORAGE

The existing storage facility was described in detail in Chapter 1. The reservoir has a capacity of 188,000 gallons. Several bracing straps were damaged during the 2001 Nisqually earthquake. Since then, repairs, seismic upgrades, and painting have been completed.

Existing Effective Storage

As described previously, the effective storage capacity is that capacity of the reservoir that is reliably available in the reservoir and capable of being withdrawn from the reservoir at the rates and pressure required for the water storage purposes. Details regarding the Community's reservoir are included in Table 3-6.

TABLE 3-6

Reservoir Characteristics

Reservoir Characteristic	Value
Nominal Capacity	188,000 gallons
Diameter	20 feet
Unit Volume	2,379 gal/ft
Overflow Elevation	208 feet
Base Elevation	129 feet

Although the capacity of the reservoir is approximately 188,000 gallons, in order to maintain a minimum of 30 psi at the highest points in the distribution system, only the top 12 feet, or 28,203 gallons of storage can be considered usable storage. To maintain a minimum pressure of 20 psi , under fire flow conditions, the top 36 feet, or 85,644 gallons is available for storage.

Effective Storage Requirement

Storage requirements for Hartstene Pointe water system are determined according to the Department of Health Water System Design Manual. The storage requirements are based on the sum of the following:

- Equalizing Storage
- Standby Storage
- Fire Suppression Storage

Equalizing Storage

Equalizing storage is used to meet peak hour demands that exceed the installed system source capacity. The volume of equalizing storage required depends on peak hour system demands, the length of time the peak hour demands persist, the source production rate, and the mode of system operation. Sufficient equalizing storage must be provided in combination with available water sources and pumping facilities such that peak system demands can be satisfied.

The Water System Design Manual recommends that equalizing storage be calculated using the following equation, but in no case should it be less than zero:

$$V_{ES} = (Q_{PH} - Q_S)150 \text{ minutes}$$

Where

V_{ES} = Equalizing storage component (gallons)
Q_{PH} = Peak hourly demand (gpm)
Q_S = Total source of supply capacity, excluding emergency sources (gpm)

The total source of supply capacity for the Community is 173 gpm. The peak hour demand projected within the twenty-year planning period exceeds the combined instantaneous pumping capacity of Wells 1 and 2. Total peak hour demand ranges from 205 gpm to 225 gpm in 2007 and 2028, respectively. Thus, the equalizing storage varies from 4,800 gallons ((205 – 173)*150) to 7,900 gallons ((225 – 173)*150) in 2007 and 2028, respectively. Equalizing storage volumes are summarized in Table 3-7.

Standby Storage

Standby storage is provided in order to meet demands in the event of a system failure such as a power outage, an interruption of supply, or break in a major transmission line. The amount of emergency storage should be based on the reliability of supply and pumping equipment, standby power sources, and the anticipated length of time the system could be out of service.

The Water System Design Manual recommends that standby storage be calculated using the larger of the following two equations:

$$V_{SB} = 2(ADD)(N)-T_m*(Q_S-Q_L)$$

Or

$$V_{SB} = 200 \text{ gallons x } N$$

Whichever is greater, where

V_{SB} = Total standby storage component (gallons)
ADD = Average daily demand per ERU (gpd per ERU)
N = Number of ERUs
Q_S = Sum of the capacities of all sources serving the water system, gpm
Q_L = Capacity of the largest single source serving the system, gpm
T_m = Maximum time remaining sources will be allowed to pump per day, minutes.

The second equation yields larger standby storage volumes than the longer first equation. It is important to note that ERU values are estimated to be equal to the number of connections in the system over the twenty year planning period. Standby storage volumes range from 88,400 gallons (200*442) to 99,850 gallons (200*494) in 2006 to 2028, respectively. Standby storage volumes are summarized in Table 3-7.

Fire Suppression Storage

Fire suppression storage is provided to ensure that the volume of water required for fighting fires is available when necessary. Fire suppression storage also reduces the impact of fire fighting on distribution system water pressure. The amount of water required for firefighting purposes is specified in terms of rate of flow in gallons per minute (gpm) and an associated duration. Fire flows must be provided at a residual water system pressure of at least 20 pounds per square inch (psi) at all points in the system.

Fire suppression storage is calculated using the following equation:

$$V_{FSS} = FF*T_m$$

Where

V_{FSS} = Required fire suppression storage component (gallons)
FF = Fire flow rate (gpm)
T_m = fire flow duration (minutes)

Based on discussion with the Mason County Fire Marshal, it has been determined that the County does not rely on the hydrants at Hartstene Pointe for fire low. Instead, pumper trucks form Fire District No. 5 are used for firefighting purposes. However, the Fire Marshal has indicated that when distribution system improvements or pipe replacement projects are planned for the system, fire flow should be taken into consideration. Although fire protection is not currently provided by the system, fire suppression storage is considered in the storage analysis to determine if the capacity of the reservoir is adequate should the County choose to provide it in the future as upgrades are made to the system. The County fire flow standard for communities such as Hartstene Pointe is 500 gpm for 30 minutes.

Total Storage Requirements

The equalizing and standby storage components have been calculated based on projected demands and ERUs from Table 2-7. The total storage requirements are summarized in Table 3-7 and compared to the existing effective storage.

TABLE 3-7

Total Storage Requirements

Year	Required Storage, gallons				Existing Effective Storage, gallons	Storage Surplus/ (Deficit), gallons(2)
	Equalizing	Standby	Fire Suppression	Total(1)		
2007	4,800	88,400	15,000	108,200	28,200	-80,000
2008	5,300	89,900	15,000	110,200	28,200	-82,000
2009	5,700	91,500	15,000	112,200	28,200	-84,000
2010	6,100	93,100	15,000	114,200	28,200	-86,000
2011	6,600	94,700	15,000	116,300	28,200	-88,100
2012	7,000	96,400	15,000	118,400	28,200	-90,200
2013	7,500	98,000	15,000	120,500	28,200	-92,300
2014	7,800	99,400	15,000	122,200	28,200	-94,000
2019	7,800	99,400	15,000	122,200	28,200	-94,000
2028	7,800	99,400	15,000	122,200	28,200	-94,000

(1) Total = Equalizing + Standby + Fire Suppression.
(2) Deficit = Existing Storage – Total Required Storage.

The total storage required is the sum of the equalizing storage, standby storage, fire suppression storage and operational storage components. According to the storage analysis, which is based on the projected population and water demand, the community of Hartstene Pointe is currently deficient in amount of usable storage available.

If the local fire marshal allows nesting of standby and fire suppression storage, the deficit would be reduced by 15,000 gallons. This would result in a deficit of -65,000 gallons in 2007, and -79,100 in 2028. Thus, additional storage would continue to be required if Hartstene Pointe was allowed to nest storage.

SYSTEM ANALYSIS

DISTRIBUTION SYSTEM ANALYSIS

The development of a computer hydraulic model, which can accurately and realistically simulate the performance of a water system in response to a variety of conditions and scenarios, has become an increasingly important element in the planning, design, and analysis of municipal water systems. The Washington State Department of Health's WAC 246-290 requires hydraulic modeling as a component of water system plans.

Hydraulic Modeling Software

The Hartstene Pointe water system was analyzed using MWHSoft's H2ONet hydraulic modeling software, which operates in an AutoCAD computer-aided design and drafting environment. The H2ONet model was created from the Community's water system base map.

The H2ONet model is configured with a graphical user interface. Each water system element, including pipes, valves, pumps, and reservoirs, is assigned a unique graphical representation within the model. Each element is assigned a number of attributes specific to its function in the actual water system. Typical element attributes include spatial coordinates, elevation, water demand, pipe lengths and diameters, and critical water levels for reservoirs. With attributes of each system element as the model input, the H2ONet software produces the model output in the form of flows and pressures throughout the simulated water system.

A description of the distribution system facilities was provided in Chapter 1. The original hydraulic model used to analyze the system was EPANET to identify areas of the distribution system which are deficient in flow and pressure. This Plan has upgraded this model to H2ONet.

Model Assumptions

Prior to the calibration of the hydraulic model, the basic layout of the water system is recreated within the model. The lengths, diameters, and connection points of system piping are assigned using an updated base map of the water system. The locations of water mains and normally closed valves are found on water system base maps, while the critical elevations of the reservoirs are obtained from City officials. The assumptions regarding the modeling of the Community's water sources, and the system demands are included in the following sections. Hartstene Pointe has no PRVs in the existing WSP.

System Demands

A key element in the hydraulic modeling process is the distribution of demands throughout the water system. Total demand on the system is based on the existing and projected demands from Chapter 2. Existing demands were distributed uniformly throughout the water system.

Five demand sets were used in the hydraulic analysis.

- 2006 Average Daily Demands: These demands were used while calibrating the model.
- 2014 Peak Hour Demands: These demands were used to verify the system is able to meet the DOH standards to supply domestic water at a minimum system wide pressure of 30 psi within the 6-year planning period.
- 2014 Maximum Day Demands: These demands were used to evaluate the system's ability to meet the maximum day demands plus required fire flows at DOH's requirement of 20 psi within the 6-year planning period.
- 2028 Peak Hour Demands: These demands were used to verify the system is able to meet the DOH standards to supply domestic water at a minimum system wide pressure of 30 psi within the 20-year planning period.
- 2028 Maximum Day Demands: These demands were used to evaluate the system's ability to meet the maximum day demands plus required fire flows at DOH's requirement of 20 psi within the 20-year planning period.

Model Calibration

The calibration of a hydraulic model provides a measure of assurance that the model is an accurate and realistic representation of the actual system. The hydraulic model of the Hartstene Pointe water system was calibrated using data obtained from fire hydrant tests at various locations throughout the water system. Four static pressure measurements were conducted , with the assistance of Mason County personnel, on October 10, 2006. During these tests, static pressures were recorded. Field results were used to calibrate the hydraulic model through verification and adjustment of pipe type, sizes, roughness coefficients, and elevations. Residual pressures were not taken during the site visit because the distribution has not expanded since the 1998 Plan.

A description of each testing location is presented in Table 3-8.

TABLE 3-8

Hydrant Testing Locations

Test Number	Node Number	Testing Location
1	2	End of Promontory Drive
2	29	Pitcairn Place and Pointes Drive East
3	16	Lagoon Drive and Pointes Drive East
4	46	Barnacle Drive

The system conditions at the time of each test were recorded. The reservoir water level was at 77.5 feet at the time of hydrant testing. The system conditions at the time of testing were replicated in the hydraulic model during the calibration process.

Using the system conditions for each hydrant test, the hydraulic model was used to generate static pressure at the hydrant. The total system demand at the time of the hydrant tests was assumed to be the average day demand for 2006. Model output was generated at points in the model equivalent to the locations of the hydrant tests.

The system pressures and pipe flow rates determined in the hydraulic analysis are highly dependent on the friction loss characteristics established for each pipe. The friction losses occurring in lengths of pipe and various valves are accounted for in the hydraulic model. The friction factors for the pipes in the modeled system are adjusted throughout the calibration process until the model output best approximates the measured values. Hazen-Williams C-factors between 110 and 150 are used throughout the system. These friction factors are typical values for most pipe and are generally conservative. The friction factors for the pipe also compensates for system losses through valves and pipe fittings.

The static pressures measured in the hydrant flow tests are compared to the model output values in Table 3-9.

TABLE 3-9

Calibration Results

Test No	Static Pressure [psi]		
	Field	Model	Difference
1	46	48	2
2	62	61	1
3	80	80	0
4	38	37	1

Hydraulic models are required to be within 5 psi of measured pressure readings for long range planning, according to the DOH Design Manual, Table 8-1. Calibration of the hydraulic model produced results that are within 2 psi of actual field test data for static pressure.

Model Input

Model input assumptions have significant impacts on peak hour and fire flow results. Table 3-10 shows the reservoir levels modeled during the three model scenarios.

TABLE 3-10

Reservoir Levels During Model Scenarios

Year	**2006**	**2014**	**2028**
Reservoir Height [feet]	79	79	79
Peak Hour Scenario Height [feet]	76.4	75.1	74.2
Fire Flow Scenario Height [feet]	70.1	68.8	67.9

Peak Hour Demand Modeling Results

According to WAC 246-290, a water system must maintain a minimum pressure of 30 psi in the distribution system under peak hour demand conditions. Hartstene Pointe's existing distribution system has been modeled under 2006, 2014, and 2028 peak hour demand conditions. The pressures of these scenarios are presented in Appendix H. Under 2028 peak hour demand conditions, the system is capable of meeting the minimum pressure requirements.

Fire Flow Modeling Results

The DOH Water System Design Manual states that a water system should be designed to provide adequate fire flow under maximum day demand conditions, while maintaining a minimum pressure of 20 psi. Table 3-11 provides available fire flow at all of the hydrant locations within Hartstene Pointe.

TABLE 3-11

Available Fire Flow

Hydrant Node	Required Fire Flow (gpm)	Available Fire Flow (gpm)		
		2006	2014	2028
2	500	251	246	243
3	500	246	236	231
7	500	644	616	602
8	500	689	657	641
10	500	457	439	431
11	500	396	382	376
12	500	394	380	374
13	500	435	424	419
16	500	465	454	449
22	500	418	407	403
25	500	430	416	411
26	500	473	460	454
28	500	461	444	437
29	500	653	636	629
32	500	1189	1165	1154
33	500	585	567	559
34	500	1257	1217	1198
35	500	1505	1473	1456
37	500	602	594	590
40	500	672	665	661
42	500	1256	1217	1197
45	500	321	311	305
46	500	1535	1484	1455
47	500	985	947	929
52	500	419	408	404

Thirteen of the 25 hydrants in Hartstene Pointe are unable to supply the minimum 500 gpm required for fire protection. Figure 3-2 illustrates the available flow at each of the hydrants. It is recommended that the Community repaint the hydrants to distinguish which are capable of providing protection in case of an emergency. Upgrading the 4-inch piping in the system to 6 inch would result in acceptable fire flow at all but one of the substandard hydrants. Looping the line from hydrant 10 to the line at hydrant 52 with 150 feet of 6-inch pipe would result in acceptable fire flow at hydrant 10.

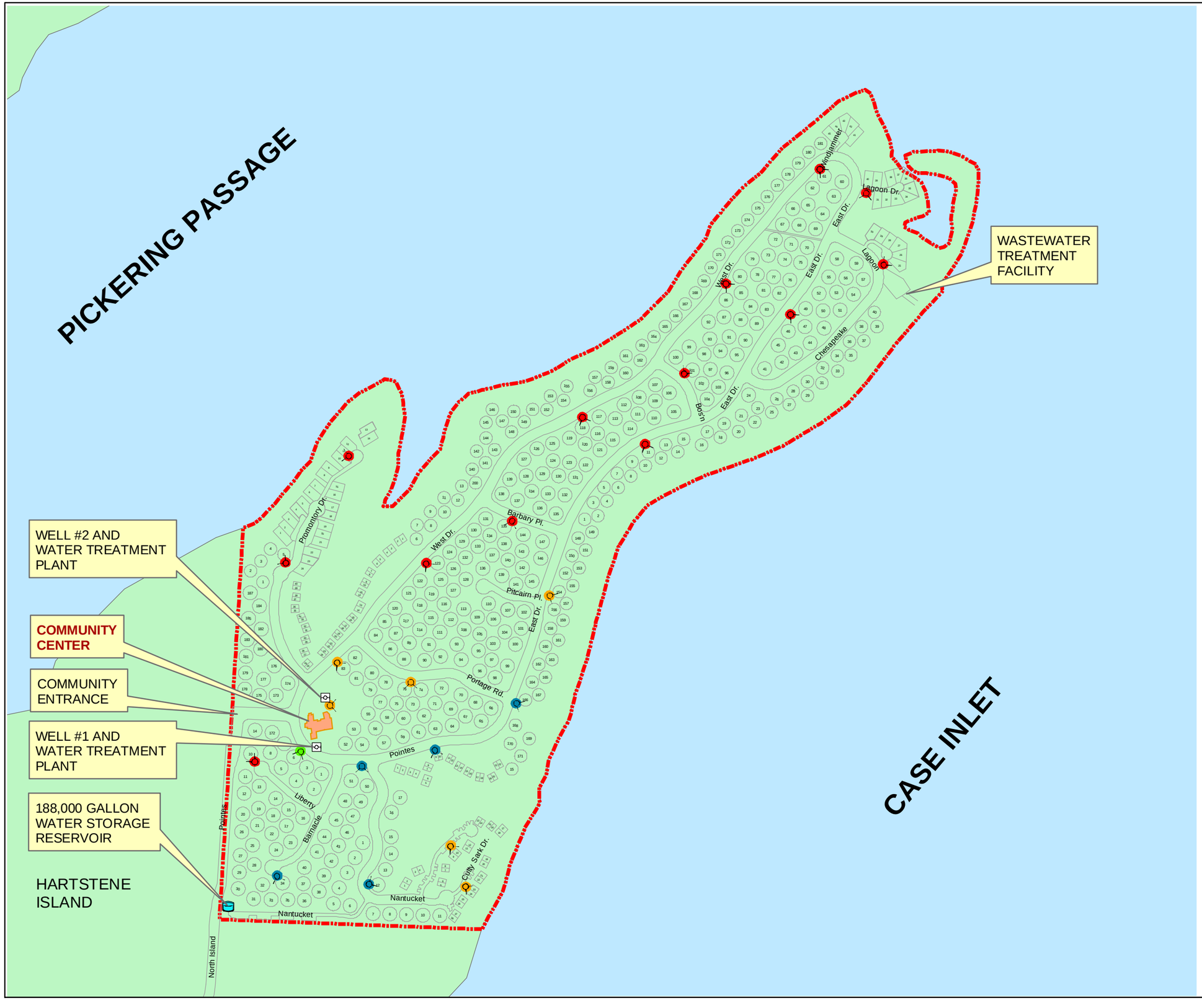

N

0 600 1,200 Feet

LEGEND:

- COMMUNITY BOUNDARY
- HYDRANTS

AVAILABLE FIRE FLOW:

- UNDER 500 GPM
- 500 - 750 GPM
- 750 - 1000 GPM
- OVER 1000 GPM

HARTSTENE POINTE

WATER SYSTEM PLAN UPDATE
FIGURE 3-2
AVAILABLE FIRE FLOW

Gray & Osborne, Inc.
CONSULTING ENGINEERS

CONSULTING ENGINEERS

MSEIDEL D:\GIS\MASONCO\HARSTENE_POINTE\FIRE_FLOW.MXD

SYSTEM CAPACITY SUMMARY

The following table summarizes the capacity of the Hartstene Pointe facilities by how many ERUs each component can support.

TABLE 3-12

Water Facility Customer ERU Capacity

Component	Total ERU Capacity
Source	**819**
Water Rights, Qi	1,642
Treatment	829
Storage	**124**
2007 Existing ERUs	442
2012 Projected ERUs	497
2028 Projected ERUs	497

The limiting factor for the overall capacity of the system is the storage reservoir. There is not adequate storage to support the existing customers. All other areas of the system have sufficient capacity to serve Hartstene Pointe through the 20-year planning period.

SYSTEM DEFICIENCIES AND PROPOSED IMPROVEMENTS

WATER QUALITY MONITORING

Stage 2 D/DBP Requirements – 6-Year Planning Horizon

Hartstene Pointe will be required to comply with new requirements for the Stage 2 D/DBP Rule beginning April 1, 2008 with the submittal of an IDSE Plan. The IDSE Report is due July 1, 2010. Thus, these required tasks will be put in the 6-year planning horizon.

SOURCE

Well Rehabilitation – 20-Year Planning Period

The wells have not been rehabilitated since their installation and show signs of deterioration, as seen in the photos in Chapter 1. As part of the 20-year planning horizon, Mason County will rehabilitate the existing wells.

STORAGE

Booster Pump Station at Reservoir – 6-Year Planning Period

As shown in the storage analysis, Hartstene Pointe is currently unable to meet the projected storage demands of the system through the 20-year planning period. Installation of a booster pump at the reservoir would allow usage of the entire volume, and the existing storage capacity would be sufficient. As a public safety issue that was also recommended in the 1998 Plan, this improvement is placed in the 6-year planning horizon.

DISTRIBUTION SYSTEM

Water Service Meters – 6-Year Planning Horizon

Implementation of the Water Use Efficiency Rule will require Hartstene Pointe to install service meters at all connections by 2018. Although the Rule allows up to 12 years for installation, it will benefit the Community to begin the process as soon as possible. Water service meters will benefit Hartstene Pointe by providing system leakage data, and will allow billing based on usage. As part of this project, the water system base map shall be updated to show the locations of service lines.

Color Code Fire Hydrants – 6-Year Planning Period

Under fire flow conditions, the system is unable to provide adequate fire flow while maintaining a minimum pressure of 20 psi throughout the distribution system. In case of a fire, the fire hydrants should be painted to distinguish which hydrants are able to provide flow. As a public safety issue, this improvement is placed in the 6-year planning period.

Leak Detection Test – 6-Year Planning Horizon

Without service meters, the Community is unaware of lost and unaccounted for water and thus the potential for leaks. A leak detection test should be performed to determine areas within the distribution system that require pipe replacement.

TREATMENT

WTP Improvements – 6-Year Planning Period

In order to improve the efficiency of the treatment plants, several parts should be replaced. These include new chemical feed pumps, filtration media, and permanganate tanks. Based on the results from the most recent IOC tests on Well No. 1, these improvements should be made in the next 6 years.

WTP Environmental Control – 20-Year Planning Horizon

As viewed in the photos of the treatment plants in Chapter 1, corrosion has dramatically affected the equipment as a result of the treatment process. In order to mitigate corrosion, new environmental controls should be installed in both WTP buildings. A ventilated closet should be built to house the hypochlorite system, and a dehumidifier should be placed in the treatment room.

TELEMETRY

WTP Control System – 6-Year Planning Horizon

Mason County staff serving Hartstene Pointe have voiced a need for an updated control system at Well No. 2 that is similar to Well No. 1. While this improvement will improve operation, it is not vital to the operation of the system and is placed in the 20-year planning period.

CHAPTER 4

CONSERVATION PROGRAM

INTRODUCTION

The objectives of this chapter are to assess the development and implementation of Hartstene Pointe's conservation program to promote efficient water use, the adequacy of the Community's water rights to provide for existing as well as future needs, system reliability, and to describe existing and proposed interties.

CONSERVATION PLANNING REQUIREMENTS

The Washington Legislature passed the Water Use Efficiency Act of 1989 (43.20.230 RCW), which directs the Department of Health (DOH) to develop procedures and guidelines relating to water use efficiency. In response to this mandate, the Department of Ecology (Ecology), the Washington Water Utilities Council, and DOH jointly published a document entitled *Conservation Planning Requirements* (1994). This document provides guidelines and requirements regarding the development and implementation of conservation programs for public water systems. Minimum standards for water conservation planning are prescribed in Washington State law and summarized in the *Conservation Planning Requirement*s along with recommended conservation efforts that public water systems must review and/or implement to receive approval of water system plans.

The *Conservation Planning Requirements* establish varying implementation requirements based on the number of connections served by the water system. In 2007, the Hartstene Pointe water system served 442 connections, and therefore qualifies as a "small" public water system. A small system is defined as serving less than 1,000 connections. Water conservation measures for small systems are discussed further in this chapter. Consistent with the state guidelines, the Community's conservation program should contain water use data collection, water demand forecasts, and a water conservation plan. However, as discussed previously, water use data is not available.

WATER USE EFFICIENCY RULE

In addition, the Municipal Water Supply – Efficiency Requirements Act, Chapter 5, Laws of 2003 (Municipal Water Law), amended Chapter 90.46 RCW to require additional conservation measures. DOH published a guidance document, titled *Getting Started: Water Use Efficiency Guidebook* in July 2007. A copy of this document, DOH Publication 331-375, is included in Appendix I. The Water Use Efficiency Rule was formally adopted under WAC 246-290 in June 2006. Table 4-1 lists new elements required for municipal water suppliers serving between 15-999 connections under the adoption of the new rule.

TABLE 4-1

Water Use Efficiency Requirement: 15-999 Connections

	Source Description
Included in WSP	Monthly source production
	Annual usage data for customer classes
	Forecast current, 6-year, 20-year demand with and without meeting water use efficiency goals
	Evaluate distribution system leakage
	Evaluate water use efficiency measures or implement
Outside of WSP	Service meters installed by January 22, 2017
	Water distribution system leakage standard will be set at 10 percent unless not technically feasible
	Develop a water loss control action plan
	Leakage compliance calculated over 3-year period
	Set quantitative water use efficiency goals every 6 years
	Annual performance reporting

The installation of service meters is a major addition to the Hartstene Pointe water system. DOH will allow water systems until January 22, 2017, to phase in meter installation. Service meter installation will benefit the Community's water system by providing reliable determination of distribution system leakage as long as meters are tested, maintained, and repaired on a regular basis. Another major new requirement is submitting annual performance reports to DOH. Systems serving less than 1,000 connections must submit their first report by July 1, 2009. Hartstene Pointe's annual performance report to DOH must include:

- Total source production
- Distribution system leakage in percentage and volume
- Goal description, schedule, and progress toward meeting goals

The goal setting process of the report must be held through a public forum and re-evaluated every six years. The first water use efficiency goals must be set by July 2009 for Municipal Water Suppliers serving less than 1,000 connections. Outside of this Plan, the County will be required to meet a minimum leakage standard in the distribution system of ten percent. Compliance for all metered system will begin in 2011 and will be based on data from 2008 through 2010. While Hartstene Pointe is phasing in service meters, they will be unable to report system leakage to DOH. Alternatively, they will report on the progress and schedule of completing the installation of meters. The County will begin taking consumption data as soon as the entire system is metered. The benefits of minimizing leakage include operational efficiency that extends the life of the water

system. In order to minimize leakage, meters must be installed to determine the amount of lost and unaccounted for water within the distribution system.

WATER USE DATA REPORTING

A summary of the water use data that the County will be required to obtain per the *Conservation Planning Requirements* is presented in Table 4-2.

TABLE 4-2

Summary of Water Use Data Collection

Required Data Type(1)	Unit of Measure	Collection Frequency	Comments
Water Service Connections	Connections	Annual	442 as of 2007
Source of Supply Meter Readings	Gallons	Daily	Production data is collected at both WTPs daily
Export from Other Interties	ft^3/sec	Bimonthly	Not applicable
Peak Day	Gallons	Daily	Not available
Peak Month	Gallons	Annual	Peak month is tabulated monthly based on flow meter readings.
Unaccounted for Water	Percent	Annual	Not available. Based on annual production and consumption.
Accounted for Water	Gallons	Bimonthly	Not available.
Single-Family(2) Service Meter Readings	Gallons	Bimonthly	No customer meters within the system.
Commercial Service Meter Readings	Gallons	Bimonthly	
Population Served	People	Annual	1045 as of 2007
Economic Data	Dollars	Bimonthly	See existing water rates in Table 2-8
Conservation Data	NA	NA	Not Applicable

(1) Water use data collection requirements are based on DOH 1994 Conservation Planning Requirements

(2) Single-family unit is defined as a house with one family and one service meter.

CONSERVATION PROGRAM DEVELOPMENT AND LEVEL OF IMPLEMENTATION

REQUIRED MEASURES FOR ALL SYSTEMS

The *Conservation Planning Requirements* summarize the required and recommended conservation efforts that public water systems must review and/or implement to receive approval of water system plans or water right permits. The required measures for all systems include source meter installation, program promotion, and leak detection and repair. Recommended measures are based on the number of connections served by a public water system. At present, Hartstene Pointe serves 442 connections. Therefore, the Community qualifies as a small-sized public system, defined as a water system with less

than 1,000 service connections. The Community's 1998 Water System Plan established a conservation program that no longer meets current DOH requirements.

This Plan establishes a new water conservation program for Hartstene Pointe that includes the following conservation measures, which are required for all public water systems regardless of size:

Source Meter Installation

The installation of flow meters on each source of supply is required for all water systems to measure the amount of water entering the distribution system.

Level of Implementation

Hartstene Pointe has source meters at each water treatment plant.

Program Promotion

Program promotion includes publicizing the need for water conservation through distribution of DOH brochures, bill inserts, and requiring efficient plumbing fixtures in new development.

Level of Implementation

The only water conservation measures taken by the County since the 1998 Plan, was to display water conservation brochures in the Community Center, and discuss conservation in the annual consumer confidence report. Hartstene Pointe displays and distributes water conservation information at the Community Center for public use. Samples of the brochures are included in Appendix J.

Leak Detection and Repair Program

A leak detection program is an essential element of a Conservation Program to reduce lost and unaccounted for water.

Level of Implementation

The volume of lost and unaccounted for water in Harstene Pointe's distribution system is unknown due to the absence of service meters. Once meters have been phased into the water system, the County will evaluate the need for a leak detection program.

RECOMMENDED MEASURES

Dependent on the number of service connections, there are recommended water conservation measures that will be evaluated for potential implementation. The

Community falls under the category of a small system because they have less than 1,000 water service connections.

In addition to the required measures for all systems noted above, the following conservation measures are recommended for small systems if proven to be cost effective. The Conservation Planning Requirements state: "In general, the selection and implementation of conservation measures should be determined by the cost of a measure in relation to the value of the water conserved, i.e., by the relation of benefits and costs." Program promotion, source meters, and leak detection were previously included in the required measures section above and are; therefore, not included under the following recommended measures.

Service Meters

All water conservation programs shall consider the benefits and cost of installing individual service meters. A metering installment program will ensure new meters are installed in the Community. Meter installation will take place in five phases, and the WWTP will be metered during the first phase. Once installed, the metering program shall include tests every 2 years and repairs as needed.

Level of Implementation

All of the service connections at Hartstene Pointe are unmetered, with the exception of the marina and the community center. All other connections shall be metered as soon as feasible, but no later than January 22, 2017. A proactive meter testing and replacement program should be implemented to keep LUF water volumes low.

Water Conservation Kits

Water conservation kits containing easily installed water saving devices can be distributed to customers. These kits can include such items as shower flow restrictors, toilet-tank-water displacement devices, leak detection tablets, informational brochures, and other materials.

Level of Implementation

The County will consider obtaining and distributing water conservation kits in the future.

Conservation Pricing

Another means of promoting water conservation is through water rates that can provide an economic incentive for customers to conserve water. Studies have shown that conservation pricing is an effective incentive that results in a change in behavior and efforts to save water. The effect that price has on water use has been well documented,

and provides an explanation and a means to effectively quantify the savings in water based on the *price elasticity* of water.

The concept of price elasticity is based on the cause and effect relationship between water use and price. American Water Works Association (AWWA) defines price elasticity as "…the responsiveness of water use to price changes." Further explanation of the AWWA definition of price elasticity is stated as follows:

> *"A price (or income) elasticity indicates the percentage change in water sales that is likely to result from a given percentage change in price (or income). Thus, a price elasticity of –0.3 means that, other things being equal, a 10 percent price increase will result in a 3 percent reduction in water use."*

Though cost is an important factor that directly affects water use, it is important to note that it is not the only factor. Other factors that influence water use include climate, precipitation, and customer demographics. AWWA provided the following considerations when comparing the sensitivity of water use to water rates:

- Consumers react to the total bill more than to the rate of the final block of use.
- Rate design affects water use but not necessarily water use price elasticity. Price elasticity does not vary substantially across uniform, declining block, and inclining block rates.
- Each user class responds differently to rate changes. Price elasticity varies substantially across customer classes.
- The components of residential demand have different sensitivities to rate changes. Summer use is more sensitive to rate changes than winter or domestic use, both in the short term and long term.
- Water demand varies between peak and off-peak periods. Peak usage is more price-sensitive than off-peak usage. However, increasing monthly billing rates does not guarantee a reduced peak day water system demand, because customers can reduce their total monthly usage without reducing their peak day usage.
- Customer education programs affect price elasticity. Education provides the customer base with ways to be more efficient with water use. Customers can learn to conserve water without dramatically affecting their lifestyle. Customers that are not educated on conservation measures are less likely to be affected by the price of water, because their choices are limited to shutting the water off or leaving it on.

Level of Implementation

The Community's current monthly water rates are summarized below in Table 4-3.

TABLE 4-3

Monthly Water System Base Rate

Customer Class	Charge
Single-Family Dwelling	$21.50
Lot without Dwelling	$ 9.00

Hartstene Pointe does not have an inclined block rate structure because the service connections are not metered. Currently, the customers at Hartstene Pointe have no incentive to conserve water with the current rate structure. Once meters are installed at all connections, the County may choose to implement a variety of rate structures. They can continue to charge a base rate and introduce an overage charge amount above a specified volume. They could also implement an inclined block rate structure that would have an increasing rate charged for greater water use. A change in rate for increased water use gives the consumer motivation to reduce their water use in order to eliminate the overage charge. Hartstene Pointe will assess the benefits of restructuring its water rates when the meter installment program has begun.

CONSERVATION OBJECTIVES AND PLAN

Hartstene Pointe's objective is to continue to promote efficient water use, and install meters at all connections to accurately measure the volume of LUF water within the system. The Community's conservation plan includes the following:

- Installation of meters to monitor use.
- Perform leak detection test to determine locations requiring repair.
- Consideration of changes to the rate structure to include inclined block pricing after meters have been installed.
- Continued public awareness efforts through distribution of conservation materials at the Community Center.

WATER DEMAND FORECAST

A water demand forecast was presented in Chapter 2 of this Plan.

The Community's conservation plan should focus on meter installation, a leak detection survey, and promoting efficient water use. Once service meters have been installed a more effective conservation program can be established.

GRANTS FOR WATER CONSERVATION MEASURES

The State's Community Development Block Grant (CDBG) program can provide grants for conservation measures, including such items as indoor and/or outdoor conservation kits, toilet and washing machine replacement rebates, and leak detection surveys. In order to be eligible for the CDBG program, an applicant must demonstrate the target population consists of at least 51 percent low-to-moderate income (LMI) persons. LMI is defined as 80 percent of the county's median household income.

If the County were able to obtain a grant, conservation measures such as brochures, kits, toilet replacements, and certain rebates could be provided to low-to-moderate income residents as well as the population at large. The CDBG grant would reduce the County's investment in implementing specific components of its Conservation Program.

LOANS FOR WATER CONSERVATION MEASURES

The State's Public Works Trust Fund can provide low-interest loans for water conservation measures. Interest rates range from 0.5, 1.0, to 1.5 percent, depending on matching funds in the amount of 15, 10, or 5 percent, respectively.

WATER REUSE

An evaluation of a Water Reuse Program is not required for systems such as Hartstene Pointe serving less than 1,000 connections.

CHAPTER 5

SOURCE WATER PROTECTION

INTRODUCTION

This chapter updates and expands upon the Community's wellhead protection plan established in the 1998 Plan. This program was developed to help protect the Community's sources of supply by identifying possible pollutant sources within the zones of contribution of the Community's wells that may affect source water quality. Protection of the Community's sources can be accomplished through monitoring, to the best extent possible, all potential contaminant sources and limiting future development within the wellhead protection area that could adversely affect the Community's source of supply. Specific criteria against which the adequacy of source water protection is measured are presented in WAC 246-290-135.

WELLHEAD PROTECTION PROGRAM

Mason County intends to reduce the potential risk for contamination of groundwater within the identified wellhead protection area by implementing a wellhead protection program at Hartstene Pointe. The program identifies potential contaminant sources, describes procedures for notifying the potential contaminant sources of their location within the wellhead protection area, identifies actions to protect the groundwater supply, and defines local spill response procedures for spill incidents within the wellhead protection area.

PROGRAM DEVELOPMENT AND IMPLEMENTATION

The purpose of a wellhead protection program is to provide local utilities with a program for preventing groundwater contamination. A successful wellhead protection program consists of a number of components that must be developed before the plan can be fully implemented. The major components of the plan are described below and form the basis of the chapter that follows:

- A Susceptibility Assessment determining the susceptibility to contamination
- A Delineated Wellhead Protection Area based on all reasonably available hydrogeologic information, including an assessment of susceptibility to contamination.
- An Inventory of all known and identifiable potential contamination sources within each wellhead protection area.
- A Spill Response Plan for each wellhead protection area containing documentation for coordination with local first responders (police, fire, HAZMAT team, etc.).

- Contingency Plans for providing alternative sources of drinking water in the event of contamination.
- A Wellhead Protection Area Management Plan to reduce the likelihood that potential contaminant sources will pollute the drinking water supply.

SUSCEPTIBILITY ASSESSMENT

Completion of a susceptibility assessment is an important initial step in selecting appropriate delineation methods to define wellhead protection area boundaries. Completion of the susceptibility assessment and submittal to the Department of Health (DOH) allows for a susceptibility ranking. Sources that receive low susceptibility ratings receive susceptibility waivers from DOH to reduce or waive the amount of required monitoring for volatile organic compounds (VOCs) and synthetic organic compounds (SOCs). Depending on factors such as well construction, casing, and location in a geologic setting, drinking water supplies vary in their susceptibility to contaminants discharged at the surface. Wells that have been poorly constructed or have been improperly cased have an increased susceptibility. Additionally, wells located in a geologic setting where no confining layer (aquitard/layer of low permeability) exists between the aquifer and surface have a much higher susceptibility than those drawing water from deep below the surface, with impermeable layers overlying the aquifer.

Mason County completed susceptibility assessment survey forms for each of its wells and submitted them to DOH for review in June 1994. These forms are included in Appendix K. The Department of Health has indicated that the wells which serve Hartstene Pointe have been rated as moderate susceptibility and are not eligible for a susceptibility waiver. However, both sources are eligible for Area Waivers which decrease the amount of SOC monitoring that is required. Both sources were rated as low vulnerability under the Area Waiver Vulnerability Risk Code.

WELLHEAD PROTECTION AREA

The purpose of delineating a wellhead protection area is to estimate the area capable of contributing contaminants to a pumping well. These areas are referred to as zones of contribution and provide a basis for focusing a community's groundwater protection efforts. Multiple methods are used to delineate zones of contributions. A groundwater model simplifies the characteristics of an aquifer in order to provide mathematical estimates of actual conditions. As the groundwater model is increasingly simplified, the model becomes easier to use, but the results become less accurate. The most commonly accepted groundwater models for delineating a wellhead protection area (WHPA), or zone of contribution, are the Calculated Fixed Radius (CFR), Analytical, and Numeric models.

The simplest groundwater model is based on the CFR method. In the CFR method, the delineations are concentric areas around each well that are calculated based on pumping data and known or assumed aquifer characteristics.

An Analytical model requires basic hydrogeologic information including the direction of groundwater flow, gradient, and certain physical characteristics of the aquifer. These physical characteristics include the aquifer thickness, the rate at which the aquifer will transmit water (transmissivity), and whether the aquifer is confined or unconfined.

A Numeric model requires significantly more data than other methods. In Numeric modeling, a grid is superimposed over the study area. Each square in the grid, called a cell, is characterized by physical parameters that are estimated from data collected from a variety of sources. The sources may include well logs, geologic and hydrogeologic maps, geophysical data, groundwater elevation data, stream flow discharge, and meteorological data. The parameters used to define the hydrogeological characteristics of each cell in the study area include identification of the vertical relationship of each aquifer and confining layer, the transmissivity of each aquifer, the thickness of the fine grained materials which separate the aquifers, the annual recharge, the connection between surface water and groundwater, the relationship between the model area and the surrounding areas (boundary conditions), and lastly, the location and pumping rate of wells. The Numeric method generates more accurate results than the CFR or Analytical methods. However, Numeric models are relatively costly to develop. Consequently, Numeric models are more commonly used by large utilities, with complex aquifers, which have the resources to collect the extensive model input data required.

A WHPA is defined as the surface and subsurface area surrounding a groundwater source through which contamination can potentially travel and reach the source. WHPAs are based on zones of contribution (ZOCs) that are derived from the estimated time of travel required for a contaminant to move from the point of introduction into the water bearing formation to the source. The DOH Wellhead Protection Program requires a WHPA to be subdivided into five zones, which include:

- A sanitary control zone of at least a 100-foot radius, unless engineering justification supports a smaller area (WAC 246-290-135). No source of contamination may be constructed, stored, disposed of, or applied within the sanitary control zone without the permission of DOH and the water purveyor.

- Four primary zones based on 6 month, 1-year, 5-year, and 10-year time of travel boundaries. These zones are referred to as the zones of contribution of the WHPA. Within this report, these zones will be abbreviated as $ZOC_{½}$ – 6-month zone of contribution, ZOC_1 – 1-year, ZOC_5 – 5-year, and ZOC_{10} – 10-year zone of contribution.

- One buffer zone (if necessary) extending from ZOC_{10} to a groundwater divide and highlighting areas where the aquifer may be particularly susceptible or vulnerable to contamination.

The ZOC_{10} defines the boundary of the WHPA and the area to be inventoried and managed to reduce the risk of contamination.

ANALYSIS

The CFR Method was used to analyze the wellhead protection area ZOCs for the Community's Wells No. 1 and 2. This method is the minimum acceptable method of delineation for public water systems. The following equation is applicable:

$$r = \sqrt{\frac{Qt}{\pi n H}}$$

Where:

r	=	Radius of ZOCt
Q	=	Volume of water withdrawal (cubic feet per year)
t	=	travel time (1/2, 1 ,5 and 10 years)
n	=	Porosity = 0.22 (default value)
H	=	well screen interval (ft) = 10 feet (default value)

This equation was used to calculate zone of contribution radii for the six month (1/2 year), 1 year, 5 year and 10 year time horizons for the Community's wells. The value to be used for Q, the groundwater withdrawal rate, reflects the maximum annual withdrawal anticipated for each well. The water right limitations, which are detailed in Table 5-2, are used as the maximum annual withdrawal anticipated for each well. The actual screened intervals for the Community's wells are unknown. According to the DOH *Wellhead Protection Program Guidance Document* (April 1995), if the actual screened intervals are unknown or the well is constructed with an open interval at its base, a value of 10 feet should be used. The pumping volumes used in the CFR Method are shown below in Table 5-1.

TABLE 5-1

Hartstene Pointe Maximum Annual Pumping Volumes

Source	Qa [acre-ft/year]	Qa [cubic ft/year]
Well No. 1	44	1,916,640
Well No. 2	240	10,454,400

Radii values calculated for the various times of travel are presented in Table 5-2.

TABLE 5-2

Hartstene Pointe Wellhead Protection Zones of Contribution (CFR Method)

Time of Travel	Well No. 1 Zone of Contribution Radius (feet)(1)	Well No. 2 Zone of Contribution Radius (feet)(1)
6 month	370	870
1 year	930	1,230
5 years	1,180	2,750
10 years	1,665	3,890

(1) Radii are rounded to the nearest 5 feet.

Figure 5-1 shows the limits of the 6-month, 1-, 5-, and 10-year zones of contribution for Wells No. 1 and No. 2.

CONTAMINANT SOURCE INVENTORY

An essential element of wellhead protection is an inventory of all potential sources of groundwater contamination in and around the delineated WHPA. The purpose of the inventory is to identify past, present, and proposed activities that may pose a threat to the well or surrounding area. For the inventory to be effective a full accounting of all known and potential sources of contamination within the zones must be conducted and the information accurately mapped. The inventory can also help to plan management strategies and establish a mailing list to notify businesses located within the WHPA as well as emergency response agencies.

POTENTIAL CONTAMINANT SOURCES

Within a WHPA, there are many diverse activities that may contaminate an aquifer thereby jeopardizing the water supply. It is important that these activities are properly inventoried and, if necessary, regulated to prevent degradation of the groundwater supply. Relevant activities include land use and zoning practices, landfill, commercial and industrial operations, underground storage tanks, clandestine drug lab sites, septic systems, dry wells and catch basins, as well as known sites of contamination. A discussion of these practices, their potential effects on groundwater, and the regulatory requirements that may apply are included in the following sections.

Land Use and Zoning

A portion of Hartstene Pointe's WHPA is located within the Hartstene Pointe service area and the remaining portion is located within unincorporated Mason County. Areas within the service area are zoned residential, and the area within Mason County is zoned Rural Development District. Rural Development District is a mixed-use zoning district that

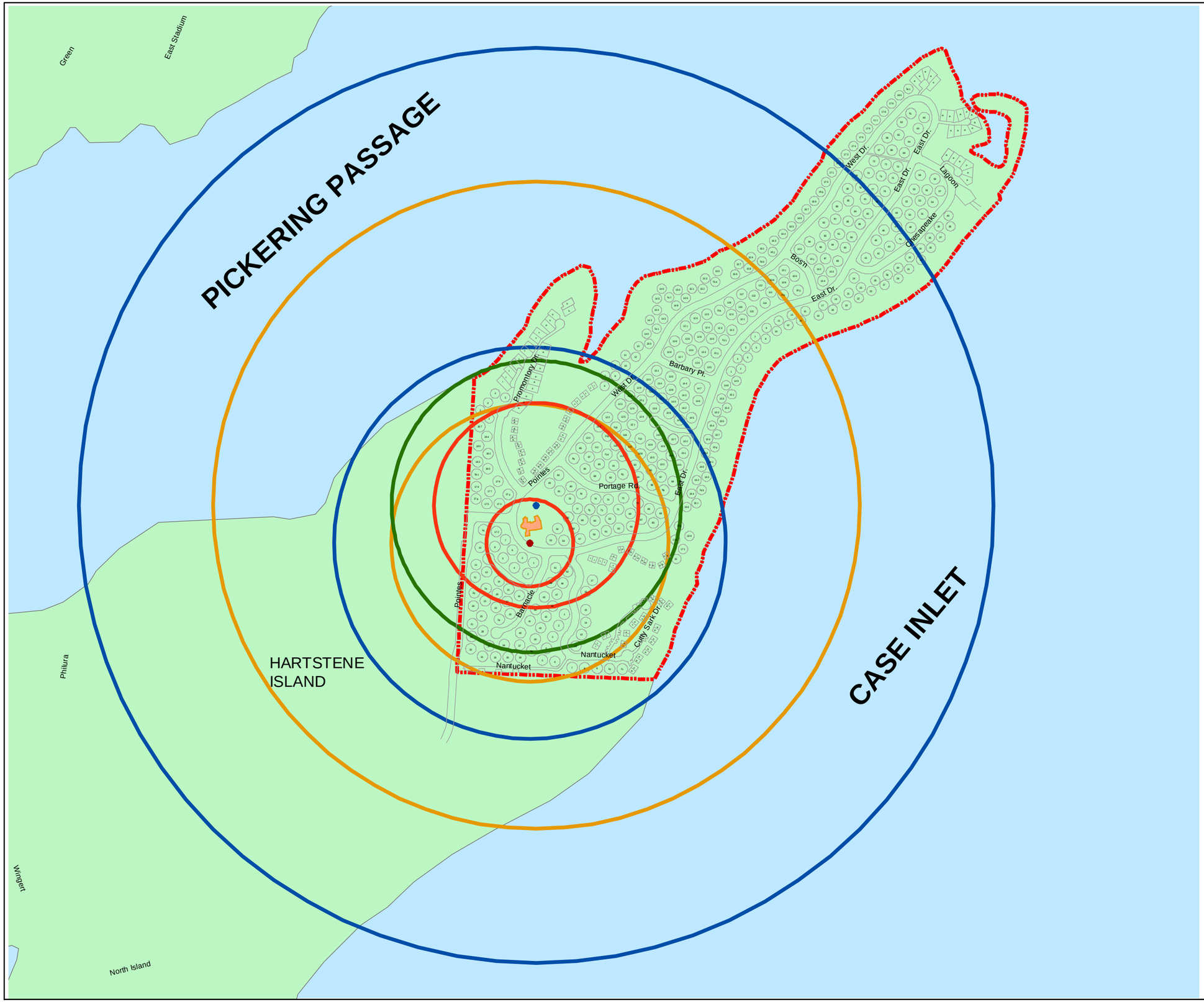

N

0 800 1,600 Feet

LEGEND:

COMMUNITY BOUNDARY

WELLS

- WELL NO. 1
- WELL NO. 2

WELL NO. 1 & 2 TIME OF TRAVEL:

- 6-MONTHS
- 1-YEAR
- 5-YEAR
- 10-YEAR

HARTSTENE POINTE

WATER SYSTEM PLAN UPDATE
FIGURE 5-1
ZONES OF CONTRIBUTION

Gray & Osborne, Inc.
CONSULTING ENGINEERS

MSEIDEL D:\GIS\MASONCO\HARSTENE_POINTE\ZOC.MXD

allows a number of different land uses such as single-family residential, resource uses and limited commercial activity.

Landfills

A landfill is a disposal facility in which solid waste is permanently placed and is not a land treatment facility. Landfills are regulated by the Washington State Department of Ecology under WAC 173-304, Minimum Functional Standards for Solid Waste Handling. These regulations set siting and closure criteria, performance standards, and operating requirements for landfills. The regulations are highly restrictive in that a proposed landfill site must meet a series of "fatal flaw" tests. A wellhead protection area would qualify as a fatal flaw, thereby prohibiting the construction of a new landfill.

Past landfill practices were not so restrictive, however. Abandoned and improperly maintained landfills and dump sites are often a major source of groundwater contamination. Leachate from landfills poses a threat to groundwater quality should it migrate to the water table. The Department of Ecology is responsible for mitigating dump site cleanup when potentially hazardous leachates are present.

There are no known active or closed landfills located within Hartstene Pointe's WHPA. However, there is a waste transfer station located within the Community, adjacent to the well heads.

Commercial and Industrial Activity

Areas of commercial and industrial land use are located within most wellhead protection boundaries. Businesses that may contribute contaminants to the groundwater include dry cleaners, gas stations and other businesses with fuel storage tanks, auto repair shops, metal plating facilities, asphalt and concrete facilities, and machine shops. Wastes generated at these businesses include substances such as petroleum products, solvents, surfactants, heavy metals, and other organic materials. These wastes can potentially enter the groundwater system through inadequate disposal practices or accidental spills. Table 5-3 presents typical commercial and industrial activities and the potentially hazardous chemicals that may be associated with them.

TABLE 5-3

Chemicals Associated with Commercial and Industrial Activities

Commercial/Industrial Activity	Potential Contaminants
Automobile/Truck Service	waste oils, solvents, acids, paints, soaps
Boat Yard/Marinas	detergents, gasoline, diesel fuels, batteries, oil, seepage from boat waste disposal areas, wood preservative and treatment chemicals, paints, waxes, varnishes, automotive wastes
Dry Cleaners	solvents (perchloroethelyene, petroleum solvents, Freon) spotting chemicals, (trichloroethane, methylchloroform, ammonia, peroxides, hydrochloric acid, rust removers, amyl acetate)
Cemeteries	fertilizers, pesticides
Country Clubs/Golf Courses	fertilizers, herbicides, pesticides, swimming pool chemicals, automotive wastes
Electric/Electronic Equipment Manufacturers	nitric, hydrochloric and sulfuric acid, heavy metal sludges, ammonium persulfate, cutting oil and degreasing solvent, corrosive soldering flux, waste plating solution, cyanide, methylene chloride, perchloroethylene, trichloroethane, acetone methanol
Furniture/Wood Manufacturing	paints, solvents, degreasing and solvent recovery sludge
Metal Plating Shops	sodium and hydrogen cyanide, metallic salts, alkaline solutions, acids, solvents, heavy metal contaminated wastewater/sludge
Lawns and Gardens	fertilizers, herbicides, pesticides
Printers, Publishers	solvents, inks, dyes, oils, miscellaneous organics, photographic chemicals
Sand and Gravel Mining	diesel fuel, motor oil, hydraulic fluids
Scrap, Salvage and Junkyards	used oil, gasoline, antifreeze, PCB contaminated oils, lead acid batteries

Underground Storage Tanks

Underground storage tanks (USTs) and leaking underground storage tanks (LUSTs) are a major threat to groundwater quality. Petroleum products which may contain impurities that are mobile in the groundwater system are the most commonly stored substances in USTs. The EPA estimates that 35 percent of all USTs could be leaking. The most common causes of leaks are structural failure, corrosion, improper fittings, and improper installation. Ecology regulates underground storage tanks in Washington State under WAC 173-360, Underground Storage Tank Regulations. The regulations require that

owners and operators of underground storage tanks comply with the following sections of the regulations:

- Notification, reporting, and record keeping
- Performance standards and operating closure requirements
- Registration and licensing
- Financial responsibility

The WAC allows a number of exemptions including tanks whose capacity is 110 gallons or less, farm and residential tanks with less than 1,100 gallons, heating oil less than 1,100 gallons per premises, and septic tanks.

As of July 1, 1991, owners and operators of all existing nonexempt underground tanks must have a permit from Ecology. A valid permit is a requirement for delivery of regulated substances. The permit must be updated annually. As a condition of the permit, the owner must have completed the following requirements:

- An assessment of the tank condition by an Ecology licensed tank service provider.

- Replacement of leaking tanks and site cleanup.

- Installation of leak detection devices.

- Proof of insurance to compensate a third party in the event of bodily injury or property damage resulting from a leaking tank. One million dollars insurance is required for petroleum marketing facilities.

By 1998, all existing nonexempt underground storage tanks must have provided cathodic protection and spill and overflow containment, in addition to the above requirements.

Installation and replacement of underground storage tanks must meet the specifications and performance and design standards identified in the WAC. Ecology follows the federal UST guidelines, which at this time do not require double wall vessels.

Underground storage tank inspections are performed by Ecology primarily through the information developed in the permitting process. Although routine annual inspections are not performed, Ecology inspectors do prioritize sites considered potentially hazardous. Technical assistance visits are also conducted at the request of the owner/operator. This provides another avenue in which Ecology can monitor the status of USTs.

Ecology maintains a file on all permitted USTs in Washington State, as required by RCRA, Subtitle 1. The file provides the site name and address, tank identification number, date of installation, size, tank status, and the substance stored at the site.

There are two know USTs within the Hartstene Pointe ZOC. The Hartstene Pointe Maintenance Association has an UST within the ZOC_5 of Well No. 2, and Jarell Cove State Park has an UST within the ZOC_{10} of Well No. 2.

Clandestine Drug Labs

Clandestine drug labs have been becoming an increasing problem in many parts of the country. Labs that produce illicit drugs use a wide variety of solvents and toxic, caustic and acidic substances. Because their activities are strictly illegal, they rarely dispose of wastes in an environmentally friendly manner. Therefore, these sites are potentially sources of groundwater contamination.

DOH maintains a list of known sites in Washington contaminated by clandestine drug labs. No sites within the Hartstene Island area are included on the DOH list. Unfortunately there is no way to know the location of sites that have not been discovered and closed.

Septic Systems

Contaminants associated with septic tank effluent include pathogenic organisms, toxic substances, and nitrogen compounds. Ammonia and nitrate nitrogen are highly soluble in water.

Hartstene Pointe is served by a sewer system, while outside of the Community boundary individuals rely on septic tanks. County parcel records do not always indicate the sewage disposal method. However, it is assumed that most of the active residences within the WHPA are connected to the sewer system.

Drywells, Catch Basins, and Improperly Sealed or Secured Wells

Stormwater serves as a source of groundwater recharge, but it can also be a source of groundwater contamination. Runoff from streets, parking lots and other impervious surfaces can contain heavy metals, hydrocarbons, petroleum products, pesticides, and animal wastes. Dry wells may be used for stormwater, septic waste, or other wastewater disposal at commercial, industrial, and multi-family residential sites. Dry wells and catch basins may be located along major transportation corridors. Contaminants generated along transportation routes, such as highways and railroad corridors, include petroleum products, lead, hazardous chemicals and other emission products. Dry wells and catch basins are potential sites of contamination because their intended use often discharges contaminants directly into the groundwater.

Accidental Spills

Accidental spills or releases of contaminants can potentially impact groundwater supplies. Potential sources of spills and leaks include underground storage tanks,

accidents and poor disposal practices. The Hartstene Pointe wells are located in secure, residential community, with few potential sources of contamination nearby. For these reasons, it is unlikely there will be a hazardous spill that would affect the community's wells. The County should contact the agencies listed above for assistance if there is a spill, with the Department of Ecology's 24 Hour Spill Response being the first contact.

A notification letter should be sent out to the local emergency responders discussing the wellhead protection plan and the need for precautions during spill response in within the wellhead protection areas. A copy of Figure 5-1 which shows the well locations and the time of travel boundaries should be included with these letters. A sample notification letter has been included as Appendix L.

Confirmed and Suspected Contamination Sites

Under WAC 173-340, Model Toxics Control Act — Cleanup, the Department of Ecology is responsible for ensuring all hazardous waste sites are properly remediated. This includes confirmed and suspected sites of contamination as well as Leaking Underground Storage Tanks (LUSTs). A separate inventory for each, which includes the status of cleanup efforts, is maintained by Ecology. Ecology conducts an initial site investigation within 90 days of learning of a potentially contaminated site. If this investigation shows that remediation action is required, the site will appear on the Confirmed and Suspected Contaminated Sites Report. The sites are also given a Washington Ranking Mode BIN number between 1 and 5. A ranking of 1 indicates the greatest assessed risk to human health and the environment. The contaminant type and the affected media, such as groundwater, are also noted. Once the remedial action has been completed, Ecology's Toxics Cleanup Program determines if the site can be removed from the list.

The siting and operation of facilities that use, treat, store, or dispose of hazardous waste are subject to the requirements of the Resource Conservation and Recovery Act (RCRA), Subtitle C. In Washington State, the Department of Ecology regulates facilities that generate more than 220 pounds of hazardous waste per month under WAC 173-303, Dangerous Waste Regulations. The regulations are significant in that they establish a number of requirements for these facilities including surveillance and monitoring, record keeping, performance and design criteria, and siting and closure procedures. Ecology divides the facilities into three levels of hazardous waste accumulation: Level 1 facilities generate 2,200 pounds of waste per month or more; level 2 facilities generate between 220 and 2,200 pounds per month; and level 3 facilities generate less then 220 pounds. Level 3 generators are exempt from the regulations. All level 1 and 2 facilities must initially file a report of their activities with Ecology and update those activities annually. From these reports, an identifier code is established for each facility. This code is required by a transporter to deliver or accept shipments. A summary of those activities are published annually by Ecology, thereby allowing water purveyors the opportunity to determine the types of activities present within their WHPA.

There are three sites in the Mason County area listed in the Department of Ecology Toxics Cleanup Program Confirmed and Suspected Contaminated Sites List. All of these sites, which include Evergreen Fuel Company, Mason County Fire District #5, and Olympic Wood Products, are located outside of the Community's WHPA.

SUMMARY OF POTENTIAL CONTAMINANT SOURCES

Table 5-4 summarizes the potential sources of contamination found within the 6-month, 1-, 5-, and 10-year zones of contribution for the Hartstene Pointe wells.

TABLE 5-4

Potential Contaminant Sources within the Hartstene Pointe Wellhead Protection Area

Potential Source	6-Month ZOC	1-Year ZOC	5-Year ZOC	10-Year ZOC
USTs	None Known	None Known	-Hartstene Pointe Maintenance Association	-Jarell Cove State Park
LUSTs	None Known	None Known	None Known	None Known
Hazardous Waste Generators	None Known	None Known	None Known	None Known
Known Sites Contaminated by Clandestine Drug Labs	None Known	None Known	None Known	None Known
State Cleanup Sites	None Known	None Known	None Known	None Known
Waste Transfer Station	-Within Community			

INVENTORY DATA SOURCES

The inventory of potential contaminant sources was compiled using various data sources. Agencies such as Ecology and EPA maintain contaminant databases that list businesses that handle and store potential contaminants. The following databases were used to create the inventory for the Community's WHPAs:

- **<u>Underground Storage Tank Report,</u> (November 2006)**
  The most recent version of the Underground Storage Tanks (UST) Report was obtained from Ecology's Toxics Cleanup Program. This list was used to locate the facilities that contain underground storage tanks and verify facilities located by field surveys of the wellhead protection areas. These facilities are summarized in the inventories and located on the maps.

- **Leaking Underground Storage Tank Report, (November 2006)**
  The most recent Leaking Underground Storage Tank (LUST) Report was also obtained from Ecology's Toxics Cleanup Program. This report was used to locate the leaking underground storage tanks on the wellhead protection area maps and note the status of remedial action at the site. The LUST report lists the site name, address, age, volume, and status of sites that contain leaking underground storage tanks.

- **Dangerous Waste and Materials Generators**
  This program, the EPA's RCRA program, has been taken over by Ecology within the State of Washington and is regulated under the Dangerous Waste Regulations (173-303 WAC).

- **Confirmed and Suspected Contaminated Sites Report, (November 2006)**
  Ecology maintains the Confirmed and Suspected Contamination Sites Report. The list is updated continuously as new information becomes available. Each site is given a site status code indicating the status of the cleanup process.

- **Clandestine Drug Lab List, (June 2006)**
  The Department of Health maintains a list of sites contaminated by clandestine drug labs. A current list of sites contaminated by drug labs was obtained from the DOH web site.

- **Zoning and Land Use**
  Zoning designations were obtained from the Community.

Field surveys were conducted to verify, where practical, the potential contaminant sources indicated in the databases.

NOTIFICATION OF FINDINGS

Hartstene Pointe will notify State and local agencies of the wellhead protection program's findings, including the WHPA boundaries. The Community will also notify residents and customers within the contribution radii with a letter discussing risks to the water system and actions to be taken in case of a spill or accidental contaminant application. Any residents with on-site sewage disposal systems will also be sent notification of precautions they can take to minimize impacts from on-site sewage disposal systems.

SPILL RESPONSE PLANNING

Spill response planning is an important aspect of both an emergency management plan and a wellhead protection program. The release of hazardous materials in a wellhead protection area can create further problems than the initial contamination of soil and

surface water. When the release occurs in either the 1-, 5-, or 10-year zones of travel, there is the possibility of the spill eventually contaminating the aquifers that supply the community's drinking water. Planning for spill response should reflect the needs and concerns of the community while maintaining the quality of the groundwater. Gaining County support in the preparation of a spill response program requires the coordination of the federal, state, and especially the local emergency response organizations.

Specific response procedures for wellhead protection areas must be determined prior to the occurrence of a contamination incident. The information obtained as a result of the susceptibility assessment and the wellhead protection area inventory can be used to determine what types of spill response measures are necessary for the protection of drinking water sources. In order to be accepted by local emergency responders, spill response procedures for wellhead protection areas should be realistic and easily implemented.

In order for spill response procedures to be effectively executed, coordination, cooperation, and communication among the responding agencies, organizations, and individuals is imperative. There are many spill response organizations at the local, state, and federal levels. Depending on the magnitude and type of the release, any of the following organizations may be involved in a spill response for a wellhead protection area in Washington State.

- *Department of Ecology (DOE):* The Spill Response Team is responsible for determining the source and cause of the release, and responsible party. If the responsible party is unknown, DOE will investigate to determine who is responsible and ensure that containment, clean-up, and disposal proceedings begin. The DOE's 24 Hour Spill Response can be contacted at (360) 753-2353.

- *Department of Health (DOH):* The Department of Health is developing a set of standard operating procedures, in conjunction with organizations such as DOE's Spill Operations Section and the Association of Fire Chiefs that first responders can use in wellhead protection areas, critical aquifer recharge areas, and other sensitive groundwater areas. DOH also provides assistance through laboratory support and services if necessary to the clean-up effort.

- *Department of Transportation (DOT):* The Washington State DOT can provide spill response assistance through traffic control, equipment, and personnel for non-hazardous clean-up activities on state and interstate highways.

- *State Patrol:* The state patrol is responsible for managing spills on interstate and state highways.

- *Local Fire Department:* Initial response to a hazardous spill will most likely be from the local fire department. The Mason County Fire District No. 5 should be notified of the wellhead protection area boundaries.

There are many spill response plans in existence in Washington State which address specific geographical areas such as wellhead protection areas and types of materials such as oil discharges. Organizations involved in the storage and transport of hazardous substances have also been required to develop spill response plans. These plans are designed to be consistent and compatible to ensure that response efforts can be carried out effectively.

CONTINGENCY PLANNING

Contingency planning is an important component of a wellhead protection program. In the event that either of the Community's wells needs to be taken off line due to contamination, a contingency plan helps to provide mitigation. A properly prepared and updated contingency plan helps ensure the water system and local officials are prepared to respond to emergency situations. Contingency planning also includes provisions for alternate sources of drinking water. The following steps are necessary for the development of an effective contingency plan:

- Identify maximum capacities of the existing system as to source, distribution system, and water rights restrictions. Assume a loss of well and reevaluate.

- Evaluate the expansion options of the existing system's capacities relative to existing water rights.

- Identify existing or potential interties with other public water systems.

- Evaluate current procedures and make recommendations on contingency plans for emergency events.

EXISTING CAPACITY

The maximum capacity of Hartstene Pointe's existing water system is discussed in Chapter 1 and evaluated in Chapter 3. The Community has adequate source capacity to serve the demands throughout the 20-year planning period.

WATER RIGHTS

The Community's water rights were discussed and evaluated in Chapters 1 and 3.

INTERTIES

Mason County does not currently have any emergency interties with adjacent purveyors. There are no other water purveyors immediately adjacent to the Community's water service area that would be able to provide significant source capacity to the Community in the event of an emergency.

RECOMMENDATIONS

In addition, the following items are recommended contingency planning efforts Hartstene Pointe should consider implementing:

- Develop emergency procedures for implementing water conservation measures should one of the wells become contaminated.

- Identify the closest water purveyor that may be available to truck water from and research the availability of trucks that could be used for this purpose.

- Diversify future source locations. Ideally new sources could be located in areas with limited potential contaminant sources and in areas far from existing sources. This would minimize the chance of all of the sources being contaminated at one time.

- Investigate the possibility of obtaining data from nearby monitoring wells in order to track potential contaminants in the aquifer near the wells.

- Make general information available for the public at the Community Center regarding the location of wellhead protection areas and appropriate handling of wastes.

- Provide public education materials regarding appropriate handling and disposal of potential groundwater contaminants.

CHAPTER 6

OPERATION & MAINTENANCE PROGRAM

OBJECTIVE

The objective of this chapter is to provide an evaluation of Mason County's operation and maintenance (O&M) program at Hartstene Pointe, and its ability to assure satisfactory management of the water system operations in accordance with WAC 246-290. The Community's Operation and Maintenance Manual and specific component related documentation are maintained by Mason County for use by operations personnel. This information is considered sensitive information and is not intended for general distribution to the public.

The O&M Program includes the following elements:

- Water System Management and Personnel
- Operator Certification
- System Operation and Control
- Preventive Maintenance Program
- Emergency Response Program
- Cross-Connection Control Program
- Record Keeping and Reporting
- O&M Improvements

The following comments are presented as an assessment of the adequacy of each section of the Hartstene Pointe Operation and Management Program.

WATER SYSTEM MANAGEMENT AND PERSONNEL

The water system is operated and maintained by Mason County Utilities and Waste Management.

OPERATOR CERTIFICATION

Department of Health (DOH) requires all Group A water systems to have at least one certified Water Distribution Manager (WDM) under WAC 246-290-050. The WDM must further be certified at a level equal to or higher than the water system's classification rating as described in Table 6-1 and in accordance with WAC 246-290-040.

TABLE 6-1

Water System Group Classification

Classification	Population Served
Group 1	Less than 1,500
Group 2	1,501 to 15,000
Group 3	15,001 to 50,000
Group 4	Greater than 50,000

Hartstene Pointe serves less than 1,500 people and therefore is required to have a WDM Level 1. Additionally, they are required to develop a Cross-Connection Control (CCC) Program and must ensure that a Cross-Connection Specialist (CCS) is employed on staff to ensure correct development of the program and proper protection to the potable water supply. A Backflow Assembly Tester (BAT) is responsible for the annual inspection and testing of backflow prevention assemblies in accordance with WAC 246-290-490. Table 6-2 provides a list of the maintenance personnel, positions, and certifications.

TABLE 6-2

Hartstene Pointe Water System Personnel Certifications

Staff	Position	Certification
Tom Moore	Public Works Director	WDM II, CCS I, WTPO I
Tom Fischer	Water System Operator	WDM II, CCS I, WTPO I
Steve Cole	Water System Operator	WDM II
Ton Ryan	Water System Operator	WDM II
Jeff Palmer	Water System Operator	WDM I

The current Water Distribution Manager and Treatment Plant Operator is Tom Fischer. He is also responsible for normal daily operations, preventive maintenance, water quality monitoring, emergency response, implementation of improvement program, and response to complaints. The Community currently has two certified CCS on staff. An outside contractor is hired to perform backflow assembly testing needs.

PROFESSIONAL GROWTH REQUIREMENTS

In order to promote and maintain expertise for the various grades of operator certification, Washington State requires that all certified operators complete not less than three Continuing Education Units (CEU) within each 3-year period. Programs sponsored by both Washington Environmental Training Resources Center (WETRC) and the American Waterworks Association (AWWA) Pacific Northwest Subsection are the most popular source of CEUs for certified operators in Washington State. A professional growth requirement may also be met by advancement by examination or certification in a different classification.

Besides providing CEUs, operator training is an important component in maintaining a safe and reliable water system. At a minimum, all personnel performing water system related duties should be trained in the following areas.

- Confined space
- Trenching and shoring
- Traffic Flagging
- Asbestos cement pipe safety
- Cross-Connection Control
- Chemical Handling
- First Aid and CPR

It is the responsibility of Mason County to assure that the Public Works staff receives the training required to remain certified.

SYSTEM OPERATION AND CONTROL

The County staff is responsible for the daily operations of its intake facility, storage facility, and distribution system.

IDENTIFICATION OF MAJOR SYSTEM COMPONENTS

It is important for water utilities to have in place a program that ensures the proper operation of the water system and the continuous reliability of critical system components. This section details Mason County's ability to operate, monitor and control its various water system facilities. These facilities include the wellheads, water treatment plants, reservoir, distribution system, valves, and master meters. The related operational activities performed by operations staff are identified, and the schedule under which these tasks are performed is presented. The normal operation of the water treatment plant was described in detail in Chapter 1 and the locations of major water system components are shown in detail in Figure 1-3.

PREVENTIVE MAINTENANCE

The most cost-effective method for maintaining a water system is to provide a planned preventative maintenance program. Through a planned preventive maintenance program, the optimal level of maintenance activities can be provided for the least total maintenance cost. Preventative maintenance programs involve defining the task to be performed, determining the frequency for each task, and then providing necessary staff to perform the task. A summary of the preventative maintenance performed at the Hartstene Pointe facilities is provided in Table 6-3. Examples of maintenance records for these facilities are provided in Appendix M.

TABLE 6-3

Summary of Preventative Maintenance Activities

Facility	Type of Maintenance	Maintenance Schedule
Hydrants	• Flush • Exercise • Measure flow	Semi-Annually
	• Paint	Every 5-years
Treatment Plant	• Monitor Chemical Feed	Daily
	• Read production meters	Weekly
	• Fe, Mn, and Ar Monitoring before and after treatment	Every 3 months
	• Replace Chemicals	As Needed
	• Clean-up Spillage	As Needed
Distribution System	• Monitor Residual Concentration	Daily
	• Calibrate source meters	Every 3 years
	• Water samples	Monthly
	• Repair leaking water mains	As Needed
	• Flush water lines	Twice per year
Backflow Devices	• Inspect and test backflow prevention devices at Community Center Pool and Wastewater Treatment Plant	Annually

SOURCE OF SUPPLY

The source of supply for Hartstene Pointe is two wells. Well No. 1 is used as the backup supply. It's pumping capacity is approximately 75 gpm. Well No. 2 is currently used as the primary source of supply and has a pumping capacity of approximately 100 gpm. To increase system reliability, a portable propane generator has been installed for Well No. 1, as recommended in the 1998 Plan. Well No. 1 currently has a manual transfer switch and plug to accommodate a generator. The generator is capable of powering Well No. 1 and its treatment facilities. The Well No. 2 pump station currently has an exhaust fan and heating system. During the summer months, the exhaust fan should be operated regularly to reduce condensation in the pump house. It is also recommended that the chemical feed pump at Well No. 2 be replaced.

Source capacity can degrade over time due to several possible causes. These include loss of pump capacity, increased head losses in piping, leakage in pump riser pipes, and reduced intake screen capacity. Changes in pump capacity can indicate pump problems. Changes in pump power demands may indicate changes in pump conditions or problems with the pump motor or motor control equipment.

TREATMENT PLANT

Maintenance of the water treatment plant is very important in maintaining the level of water service in a water system. A certified operator manages the treatment plant. Daily operations include taking daily water quality samples as required and recording on water treatment plant monthly reports, checking chemical feed systems, replacing chemicals, and adjusting chemical feed rates as needed. Recommended preventative maintenance activities are summarized in Table 6-3.

STORAGE

Reservoirs can be vulnerable to contamination in public water systems. Contaminants can enter the reservoir through cracks or openings at the vent, overflow or drain screens. Deteriorating hatch covers and vandalism can also compromise reservoir water quality. Poorly designed and maintained reservoirs can hamper the emergency operation of a water system. If reservoir drains are not functioning properly, it may be difficult to purge a contaminant from the system. Written documentation of reservoir maintenance must be completed with each inspection and repair, and a copy of the report retained on file.

Steel reservoirs need to be painted every twenty to 25 years. The interior and exterior of the reservoir at Hartstene Pointe has been painted as recommended in the 1998 Plan. The exterior and interior of the reservoir should be inspected after 10 to 15 years of use to determine if the walls need to be painted or recoated.

DISTRIBUTION SYSTEM

Maintaining records of water main conditions and repair work can play a significant role in preventing water main breaks and emergency shutdowns. By documenting leaks and maintenance work on each pipe section, trends and patterns can be established, and severe problems can often be averted. Currently the Community does not keep written records of reported leaks, breaks, main repairs, or water quality complaints.

Dead end water lines are susceptible to water quality problems and should be flushed to remove stagnant water and any sediment that may have been deposited. The Community currently flushes dead end water mains as needed.

Valves are necessary for water system control during emergencies, scheduled repairs and maintenance, and water main extensions. Quite often, contractors and other maintenance personnel who operate distribution system valves during construction activities may inadvertently leave valves closed or partially open at the conclusion of their project. A routine valve exercise program, performed at least yearly, will ensure that normally open valves are fully open, thus providing full flow in the event of a fire or other large system demand. Exercising valves also aids in finding damaged or broken valves that could fail when they are operated for shutdowns. It is the responsibility of Hartstene Pointe to know the location, type, and size of all valves within the system.

Fire hydrants are equally important water system components, and, like valves, require routine inspection and maintenance. Both valve and hydrant maintenance are sometimes overlooked, most often as a result of constraints on available staff. Currently, the Community does not inspect or flush its hydrants. It is recommended that this is done twice a year, usually in the early winter before it freezes, and consideration should be given to providing a similar type of maintenance program for the valves in the system. Although the distribution system is relatively small, records should also be kept at the treatment plant documenting valve and hydrant inspection and any work that has been done on them.

METERS

Accurate and well-maintained water meters are an essential tool in the efficient management of a water utility. In addition to their economic importance, water meters provide the utility a means to estimate lost and unaccounted water, measure the success of conservation programs, and determine compliance with water rights.

Existing Meter Reading System

There are currently no individual service meters in the water system. All of the water service connections are residential with the exception of the marina and the community center. In order to estimate water usage and lost and unaccounted for water, water service meters must be installed at all water service connections.

Manual Reading System

Manual meter reading involves visual reading of meters and utilizing meter read books in which the meter reader manually enters meter reads. The books are then delivered to the billing department where the meter reads are manually entered into a computerized billing program. The billing program notes any usage that is out of the ordinary and prompts meter rereads, which means the reader goes back to the meter to verify the usage. This system is very labor intensive and prone to errors in reading, recording, and transcribing water use data.

Automated Meter Reading Systems

There are basically three levels of automated meter reading systems that Mason County could consider to reduce labor and improve accuracy in meter reading. These include:

1. Hand-held devices that are used to key-in the meter reads. The meter reader would still walk the meters and visually read them, but the hand-held device would note any significant deviations from expected reads and advise an immediate reread. This results in efficiency by reducing reading errors and additional trips for re-reads; the data would by directly

downloadable to a computer billing system, saving data entry time and errors.

2. A walk-by system, utilizing a handheld wand that would be passed over the meter box to pick up the meter read. The reader would still walk the system, but it would be much faster because the boxes would not need to be opened to read the meters, resulting in less data entry errors. The meters would all have to be compatible with the reading equipment.

3. A drive-by system, which is similar to a walk-by system, except that it would not be necessary to wave the wand over the box because the equipment is sensitive enough to pick up the reads from the street, so the reader would just drive by to pick up the meter reads.

With any of the above systems it would be necessary to have a computer billing system that is compatible with the data gathering system.

INVENTORY OF MATERIALS

Mason County maintains supplies required to make emergency repairs at Hartstene Pointe. Spare parts for all equipment should be onsite to minimize downtime of WTP. At a minimum, the supplies include the materials necessary to repair leaks for every size and type of pipe in the distribution system. If needed, additional repair materials can be bought from nearby cities of Shelton or Allyn.

EMERGENCY RESPONSE PROGRAM

Water utilities have the responsibility to provide an adequate quantity and quality of water in a reliable manner at all times. To do this, utilities must reduce or eliminate the effects of natural disasters, accidents and intentional acts. Most utilities routinely deal with small scale emergency situations. Large scale emergency situations occur far less frequently, but may manifest themselves in the same way as the routine emergencies. If a utility is well prepared to handle routine emergencies, then they will also be better prepared to handle more disastrous ones as well. An emergency contact list is located in Appendix M.

VULNERABILITY ANALYSIS AND EMERGENCY PROCEDURES

Although it is not possible to anticipate all potential disasters affecting the Community's water system, formulating procedures to manage and remedy several common emergencies is appropriate. Common types of emergency situations include contamination of the water supply, power failure, a severe earthquake, and fire.

Contamination of the Water Supply

The most common problem for small water system is the detection of coliform bacteria. In many instances, bacteria contamination can be quickly resolved by chlorine disinfection. Instructions that the County should follow in the event that coliform bacteria are detected in the system are listed below in Table 6-4.

TABLE 6-4

Bacteriological Contamination Response Procedures

Contamination Site	Response Procedures
Reservoir	1. Collect repeat sample to confirm contamination. 2. Close valves to isolate reservoir from system and redirect wells to supply distribution system directly. 3. Inspect vents, screens, hatches, and piping to identify contamination source. 4. Drain, clean, and disinfect reservoir if water is unsuitable for consumption due to stagnation or contamination. 5. Disinfect reservoir with chlorine as required in AWWA Standards. Collect repeat samples and return reservoir to service when results are satisfactory.
Distribution System	1. Close valves where possible to isolate contamination source. 2. Flush lines to end of distribution system until chlorine residual is detected. 3. Allow 24 hours or chlorine contact time in distribution system. 4. Collect repeat samples and return system to service when results are satisfactory.

If contamination of the water supply does occur, there are procedures that must be followed in order to comply with Department of Health requirements. Procedures for various types of contamination are discussed in the following sections.

Bacteriological Presence Detection Procedure

Notification procedures for notifying system customers, the local health department, and DOH of water quality emergencies are an important component of an emergency response program. All public water systems will occasionally experience detection of bacteriological contaminants. Such detections are typically the result of sample tap contamination or improper bacteriological sample collection procedures. However, the persistent detection of coliform bacteria in the water supply, particularly E. Coli or fecal coliform, may require the issuance of a public boil water notice to ensure that the health and safety of water customers is not compromised. Emergencies such as floods, earthquakes, and other disasters can result in damage to the water system infrastructure,

which may also warrant a boil water notice as a precautionary measure. A suggested boil water notice is provided in Appendix N. WAC 246-290-320 requires water utilities to follow specific procedures in the event coliform bacteria are detected in the water system. These procedures are outlined in Figure 6-1.

IOC, VOC, and SOC Detection Procedures

A procedure for an inorganic chemical detection is presented in Figure 6-2. A procedure to comply with DOH requirements in the event of a volatile organic chemical or synthetic organic chemical detection is presented in Figure 6-3. There is little that the District can do on a short-term basis to resolve a VOC or SOC contamination event. Therefore Figure 6-3 presents a strategy for managing such a contamination event.

Power Failure

Various types of weather can cause loss of power, such as wind storms, lightning, and snow storms. Power for the community of Hartstene Pointe is provided by the Mason County PUD No. 3. Table 6-5 lists the facilities which may be affected by a lengthy power outage and actions that may be taken to reduce the impact on the water system.

TABLE 6-5

Power Outage Response Procedures

Facility Affected	Response Procedures
Wells	1. Contact the Mason County PUD No. 3 to determine the length of the power outage. 2. Hook-up portable generator for treatment plant and Well No. 1
Reservoir	1. Check the reservoir level. 2. Notify customers to curtail water use if reservoir level continues to drop.
Distribution System	1. Continue to monitor reservoir 2. Request additional water use curtailment.

Severe Earthquake

Although severe earthquakes are rare, the community of Hartstene Pointe may be vulnerable if facilities are damaged. Table 6-6 lists facilities that may be affected by a severe earthquake and the actions that may be taken to reduce the impact on the water system.

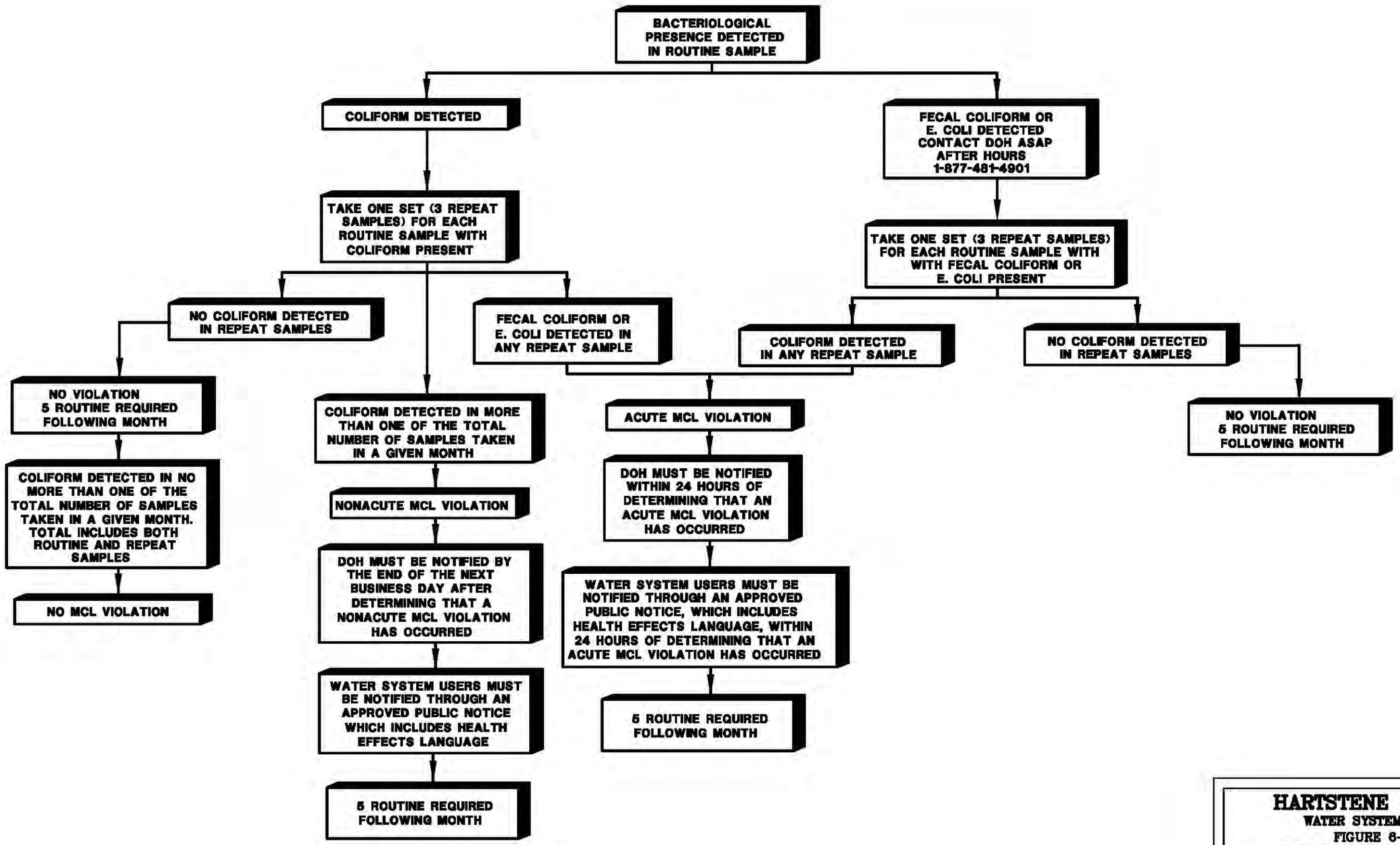

HARTSTENE POINTE
WATER SYSTEM PLAN
FIGURE 6-1
BACTERIOLOGICAL PRESENCE DETECTION PROCEDURE

Gray & Osborne, Inc.
CONSULTING ENGINEERS

FILENAME: M:\VADER\96787\QUARTSEC\FIG5-2.DWG OPERATOR: RONM CREATED: DEC 02 1996 09:30:21 UPDATED: DEC 02 1996 14:11:23 PLOTTED: AUG 14 1997 16:38:25

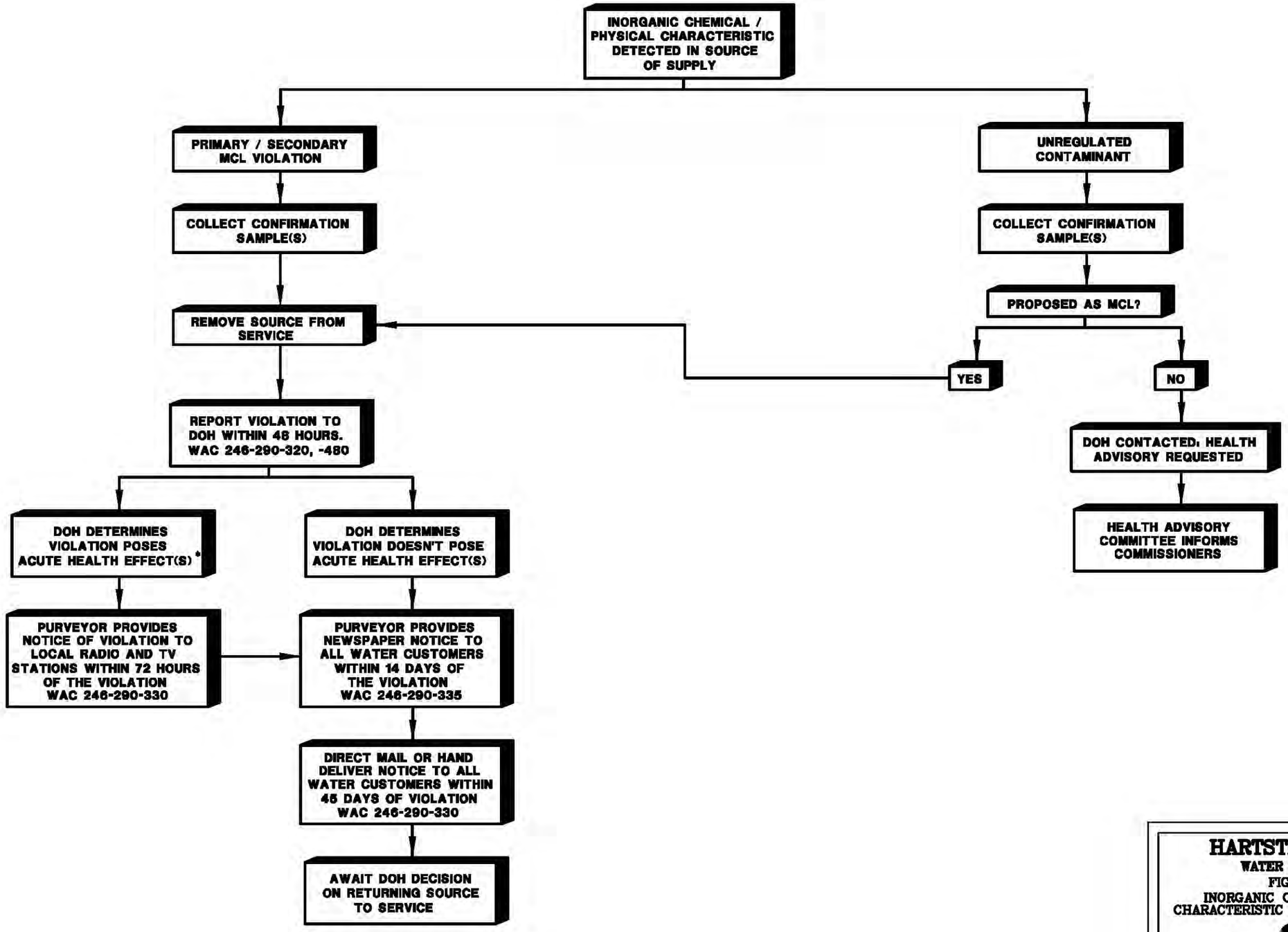

*A VIOLATION OF THE 10.0 MG/L NITRATE MCL CONSTITUTES AN ACUTE HEALTH EFFECT CONCERN.

HARTSTENE POINTE
WATER SYSTEM PLAN
FIGURE 6-2
INORGANIC CHEMICAL/PHYSICAL CHARACTERISTIC DETECTION PROCEDURE

Gray & Osborne, Inc.
CONSULTING ENGINEERS

FILENAME: M:\VADER\96787\QUARTSEC\FIG5-3.DWG OPERATOR: RDNM CREATED: DEC 02 1996 13:40:59 UPDATED: DEC 02 1996 14:04:29 PLOTTED: AUG 14 1997 16:39:38

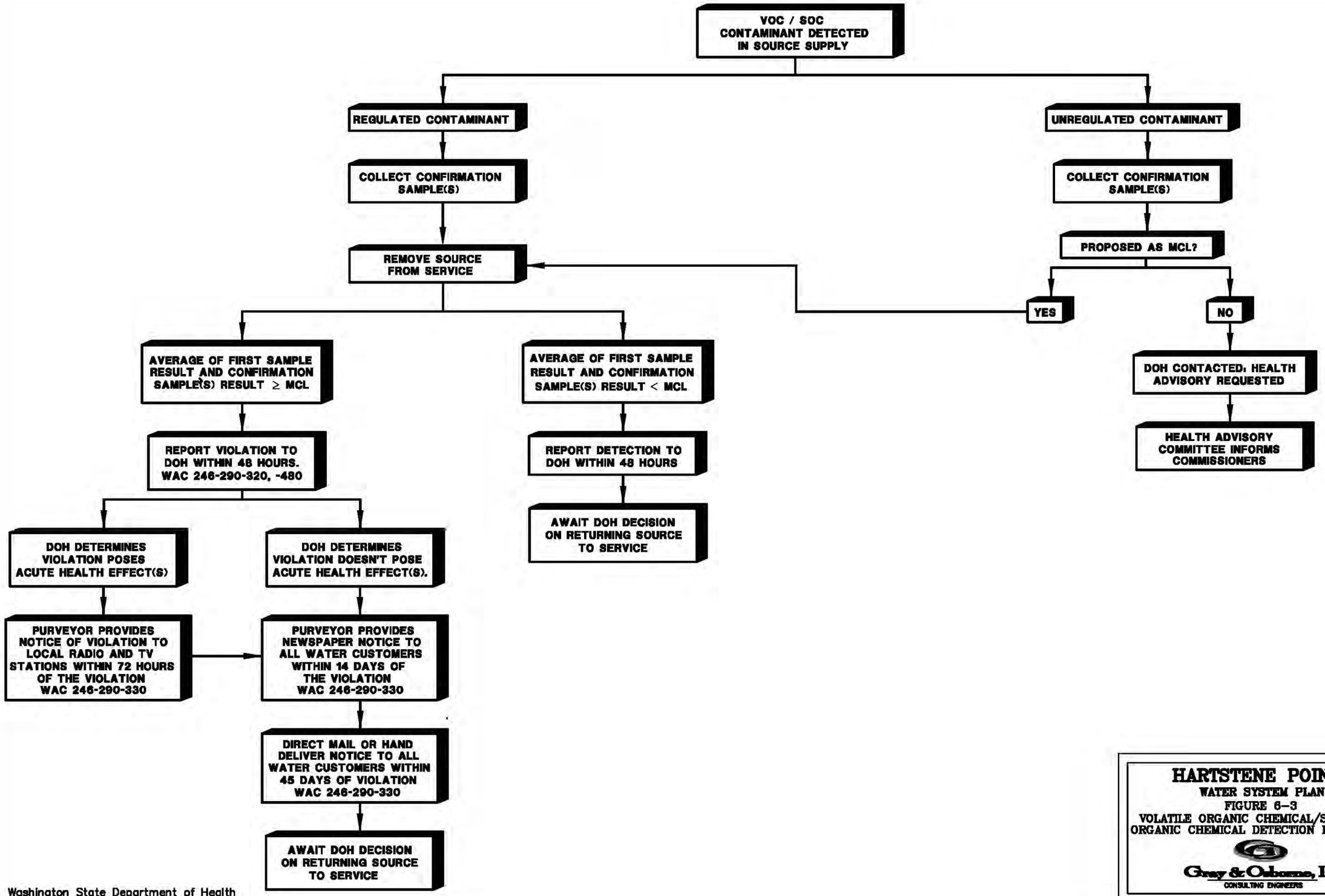

DOH: Washington State Department of Health
WAC: Washington Administrative Code

HARTSTENE POINTE
WATER SYSTEM PLAN
FIGURE 6-3
VOLATILE ORGANIC CHEMICAL/SYNTHETIC ORGANIC CHEMICAL DETECTION PROCEDURE

Gray & Osborne, Inc.
CONSULTING ENGINEERS

FILENAME: N:\VADER\96787\QUARTSEC\FIG5-4.DWG OPERATOR: RONN CREATED: FEB 15 1996 18:36:23 UPDATED: DEC 02 1996 14:07:55 PLOTTED: AUG 14 1997 16:40:37

TABLE 6-6

Earthquake Response Procedures

Facility Affected	Response Procedures
Wells	1. Check both wells and shut down pumps if necessary.
Reservoir	1. Check reservoir for structural damage. 2. Drain reservoir if in danger of bursting, or seal cracks and leaks as required.
Distribution System	1. Isolate damaged sections and repair.

Fire

A large fire in the Community will most likely result in a reduction in distribution system pressures and drawing down of the reservoir. The wells should be checked to ensure that both wells are operating properly to provide additional water. The water level in the reservoir should also be checked to see how much storage is available for system demands and fire fighting.

MITIGATION RECOMMENDATIONS

Water system reliability is an important responsibility of a water purveyor. WAC 246-290-400 Reliability, requires that water purveyors ensure adequate water service in the event of failure of a key system component.

The community of Hartstene Pointe, like any other water system, is vulnerable to a number of situations which may disrupt service, as described in the previous section. Depending on the emergency, disruption to water service could last a few hours, or several days, as would be the case in a well pump failure. An extreme example would be an event that renders both wells No. 1 and No. 2 unusable. It is recommended that a coordination effort be made with Fire District No. 5 to develop an emergency response program.

CROSS-CONNECTION CONTROL PROGRAM

As required by WAC 246-290-490, Cross-Connection Control, utilities have the responsibility to protect customers from water contamination due to cross-connections. A cross-connection control program is required to be included in the Water System Comprehensive Plan under WAC 246-290-100.

A cross-connection is any physical arrangement where the potable water supply is connected, directly or indirectly, to any liquid of unknown or unsafe quality that may contaminate the public water supply through backflow. The regulation also requires utilities to develop and implement a comprehensive program to control cross-connections

within the system. An acceptable cross-connection control program must address the following elements:

- Adoption of an appropriate ordinance, code or rule-of-service for the purveyor to establish the legal authority to implement the cross-connection control program.
- Written procedures for implementing the cross-connection control program.
- Identification of staff position delegated the responsibility for the organizations and implementation of the cross-connection control program.
- Establishment of the qualifications necessary for the personnel working in the cross-connection control program. Detailed procedures for conducting surveys of new and existing facilities to identify all existing and potential cross-connections that could result in contamination of the distribution system.
- Requirements that only approved backflow assemblies shall be installed at locations where cross-connection protection is required.
- A procedure or system for testing all backflow prevention assemblies upon installation.
- An adequate record keeping system.
- Customer information and public education regarding the cross-connection control program.

The adopted Cross-Connection Control Program and Resolution for the community of Hartstene Pointe is based on WAC 246-290-490 and the American Water Works Association Cross-Connection Control Manual, Accepted Procedure and Practice, Revised 1990. Hartstene Pointe also addresses customer education on Cross-Connection Control in the yearly Consumer Confidence Report. A copy of the Cross-Connection Control Program and Resolution is included in Appendix O. All elements of the CCCP have been implemented in the Community of Hartstene Pointe. The devices are tested annually in September, and the latest survey was mailed with the 2007 consumer confidence report in June 2008.

NEW AND EXISTING CROSS-CONNECTION DEVICES

There are three existing cross-connection assemblies in the Community located at the Wastewater Treatment Plant, community center, and the marina. New and existing cross-connection devices will be catalogued and checked by a certified CCS. It is the responsibility of Mason County to ensure proper testing of the devices on an annual basis. Backflow prevention devices are required on all new cross-connections. A condition for new services will be an evaluation by the cross-connection control certified Community staff to determine what type of backflow device is needed.

RECORD KEEPING AND REPORTING

Records of the various operational and maintenance parameters of the system are maintained by Hartstene Pointe.

WATER TREATMENT PLANT

The following records are maintained for the water treatment plant:

- Flow rate and volume of raw water
- Continuous records of the reservoir water levels
- Total volume of discharge into the distribution system
- Raw water and finished water pH and turbidity
- Well pump run times

A daily diary of raw water and finished water conditions such as water precipitation, outdoor temperature, chemical dosages, and final effluent quality is also kept by the treatment plant operator.

OPERATION & MAINTENANCE IMPROVEMENTS

The following improvements should be made to bring the Hartstene Pointe O&M Program into compliance with DOH standards and provide a safe and reliable water system.

- Ensure to have all backflow assemblies tested annually by a Backflow Assembly Tester (BAT)
- Develop and fully implement a Cross-Connection Control Program
- Implement a valve exercise program
- Paint hydrants to distinguish available flow

The Community should maintain the following records of the water system operation:

- Service meter readings (once installed)
- Service meter maintenance records (once installed)
- Valve location books
- Water service locations
- Number of new water services
- Water line locations
- A system map showing the material, size, and age of all pipelines
- A daily job diary for all work done on the distribution system
- Lengths and diameters of all new and replaced pipes

The community has indicated that they can adequately perform all operations and maintenance tasks with the six certified operators that the County has on staff for operation of its water and sewer system.

CHAPTER 7

DISTRIBUTION FACILITIES
DESIGN AND CONSTRUCTION STANDARDS

OBJECTIVE

The objective of this chapter is to document the Hartstene Pointe design and construction standards to allow Mason County to obtain DOH approval to utilize the alternative review process for construction of new and replaced water distribution facilities. Through this process, a purveyor needs no further approval from DOH for distribution project reports, construction documents, or installation of distribution reservoirs and storage tanks, booster pump facilities, transmission mains, distribution mains, pipe linings, and tank coatings. Source of supply facilities are not eligible for the alternative review process

Thus chapter includes project review procedures, system standard, policies, and procedures, and construction certification and follow-up procedures.

PROJECT REVIEW PROCEDURES

Project review procedures vary with the level of complexity of the anticipated project. Pursuant to WAC 246-290-125, the following projects do not require DOH approval:

- Installation of valves, fittings, meters, and backflow prevention devices
- Installation of fire hydrants
- Repair of a system component or replacement with a similar component
- Maintenance or painting of surfaces not contacting potable water

The County will use the submittal exception process for new water distribution main projects as outlined in WAC 246-290-125. Construction documents for new water distribution mains will not be submitted to DOH for review. All other water system projects will require DOH review and approval.

Mason County reviews all water system improvements and replacement projects during the design phase. Currently, Mason County has not adopted any Construction Standards. Suggested Standards have been developed for the County and are included in Appendix P. During construction, the design engineer, in conjunction with representatives from Public Works, will make site visits to ensure the project is constructed in accordance with the construction specifications.

Connection of additional water customers will be permitted on an on-going basis as requests for service are made to the Community. The Cross-Connection Control

Specialist (CCS) reviews the applications for water use and its cross connection potential. Prior to activation of the service connection, a CCS is required to review the backflow prevention assembly installation, if one is required, for compliance with Cross Connection Control requirements.

SYSTEM STANDARDS, POLICIES AND PROCEDURES

Design and construction of water facilities are to be in accordance with the construction standards developed for Mason County, included in Appendix P. Table 7-1 provides a list of the construction standard documents under consideration by the County.

TABLE 7-1

Hartstene Pointe Construction Standard Details

Detail Number	Title
1	Water Main Depth Requirements
2	Water Main Trench Section
3	Typical Utility Crossing
4	Concrete Thrust Block
5	Vertical Anchor Block
6	Wet Tap Connection
7	Cut in Connection
8	Fire Hydrant Installation
9	Fire Hydrant Relocation
10	Fire Hydrant Location in Cut or Fill
11	1" & Smaller Water Service
12	1-1/2" and 2" Water Service
13	Meter and Meter Vault assembly 3" through 10"
14	2" Blow Off Assembly
15	Air and Vacuum Release Assembly
16	Water Sampling Station
17	Valve Box Adjustment
18	Double-Check Detector with Fire Connection
19	Pressure Reducing Station
20	Water Valve Stem Extension
21	Asphalt Diamond Patch
22	Asphalt Pavement Repair
23	Individual Double-Check Detector Assembly
24	Detector Double-Check Valve Assembly

TABLE 7-1 – (continued)

Hartstene Pointe Construction Standard Details

Detail Number	Title
25	Reduced Pressure Backflow Device
26	Straw Bale Dam (Erosion Control)
27	Silt Fence (Erosion Control)
28	Storm Drain Inlet Protection (Erosion Control)
29	Pressure Reducing Valve (Service Lines)
30	Water Main Installation Notes

CONSTRUCTION CERTIFICATION AND FOLLOW-UP PROCEDURES

During the construction of any water facility, County Personnel will have a representative periodically inspect the construction. The representative will report progress and any variance from the construction documents to the engineer responsible for construction management. Additionally, the representative will be present for all pressure tests, disinfection procedures and water quality sampling as defined in the standards.

Significant changes in the project design during construction of DOH approved projects will require notifying DOH prior to approval to proceed. Upon completion of the project, the engineer responsible for construction management shall complete a Construction Completion Report for Water System Projects form, pursuant to WAC 246-290-040. This form is an Engineer's certification that the project was completed in conformance with the approved plans, specifications, and Construction Standards. For projects completed under Project Submittal Exceptions, pursuant to WAC 246-290-125, the Construction Completion Report form shall be submitted to Hartstene Pointe, where it will be maintained on file and made available for DOH review on request. For projects requiring DOH approval, the Construction Completion form will be submitted to DOH within 60 days of completion and prior to use of the installation. A copy of a Construction Report for Public Water System Projects is included in Appendix Q. Additionally, the construction manager shall prepare record drawings and submit them to the Community for their project files.

CHAPTER 8

CAPITAL IMPROVEMENT PROGRAM

INTRODUCTION

This chapter presents the Capital Improvement Plan (CIP) for the 6- and 20-year planning periods. Recommended water system improvements and associated costs, along with scheduling information is presented in the following sections according to analyses, identified deficiencies, and recommendations identified in earlier chapters of this plan. For the proposed projects identified in this chapter, preliminary cost estimates are provided in Appendix R. The costs associated with these projects include construction, administrative and engineering costs (25 percent), and a contingency factor (20 percent). The detailed preliminary cost estimates in Appendix R were generated prior to 2008. Thus, the values are slightly lower than the estimates provided in this chapter. The previous project costs in Appendix R were converted to 2008 dollars for the CIP.

In the future other projects may arise which are not identified as part of the Community's CIP. Such projects may be deemed necessary for ensuring water quality, preserving emergency water supply, accommodating transportation improvements proposed by other agencies, or addressing unforeseen problems with the water system. Due to budgetary constraints, the completion of these projects may require that the proposed completion dates for projects in the CIP be rescheduled. Hartstene Pointe retains the flexibility to reschedule projects, as best determined by the Community when new information becomes available for evaluation. Each capital improvement project should also be reevaluated to consider the most recent planning efforts, as the proposed completion date for the project approaches.

CAPITAL IMPROVEMENT PLAN

Table 8-1 summarizes the proposed capital improvement projects for the 6-year and 20-year planning period. Each project is discussed further in the following sections. Figure 8-1 identifies the locations of proposed capital improvements. Detailed cost estimates for the capital improvement projects are included in Appendix R. Rate impacts associated with capital project financing are discussed in Chapter 9.

STORAGE

ST-1: Booster Pump Station
Estimated Project Cost: $272,500

As shown in the storage analysis, Hartstene Pointe is currently unable to meet the projected storage demands of the system through the 20-year planning period. Installation of a booster pump at the reservoir would allow usage of the entire volume,

and the existing storage capacity would be sufficient. As a public safety issue that was also recommended in the 1998 Plan, this improvement is placed in the 6-year planning horizon.

TREATMENT PLANT

TR-1: Arsenic Treatment Modifications
Estimated Project Cost: $20,100

Well No. 2 has exceeded the arsenic MCL and treatment is therefore required. Modifications will be made to the existing treatment plant equipment in order to comply with the new arsenic standard. The county has stated that treatment will be installed and implemented by the end of 2008.

TR-2: Stage 2 D/DBP Rule Requirements
Estimated Project Cost: $20,100

Hartstene Pointe will be required to comply with new requirements for the Stage 2 D/DBP Rule beginning April 1, 2008 with the submittal of an IDSE Plan. The IDSE Report is due July 1, 2010. Thus, these required tasks are placed in the 6-year planning horizon.

TR-3: WTP Environmental Control
Estimated Project Cost: $13,100

As viewed in the photos of the treatment plants in Chapter 1, corrosion has dramatically affected the equipment as a result of the treatment process. In order to mitigate corrosion, new environmental controls should be installed in both WTP buildings within the 6-year planning period.

TR-4: WTP PLC System Upgrade
Estimated Project Cost: $12,600

Mason County staff at Hartstene Pointe have voiced a need for an updated control system at Well No. 2 that is similar to Well No. 1. The PLC upgrade to a RUGID computer is placed in the 6-year planning period.

TR-5: WTP Improvements
Estimated Project Cost: $71,400

In order to improve the efficiency of the treatment plants, several parts should be replaced. These include new chemical feed pumps, filtration media, and permanganate tanks. Based on the results from IOC tests before and after treatment, these improvements should be made in the 6-year planning period. The estimated project cost

of the treatment plant improvements are preliminary and subject to change as vendor quotes for individual items have not yet been received.

DISTRIBUTION SYSTEM

Chapter 3 evaluated the distribution system's capacity and ability to provide fire flows. System deficiencies were determined due to the absence of service meters and inability to provide fire flow.

D-1: Color Code Fire Hydrants
Estimated Project Cost: $1,300

Under fire flow conditions, the system is unable to provide adequate fire flow while maintaining a minimum pressure of 20 psi throughout the distribution system. In case of a fire, the fire hydrants should be painted to distinguish which hydrants are able to provide flow. As a public safety issue, this improvement is placed in the 6-year planning period.

D-2: Leak Detection Test
Estimated Project Cost: $2,000

Without service meters, the Community is unaware of lost and unaccounted for water and thus the potential for leaks. Hartstene Pointe plans to perform a leak detection test to determine areas within the distribution system that require pipe replacement.

D-3: Pipe Replacement
Estimated Project Cost: $3,200,000

In order to increase available fire flow within the Community, the existing 4-inch pipe in the system must be replaced with 6-inch piping. Approximately 16,690 lineal feet of 4-inch pipe will need to be replaced. This project is placed in the 20-year planning period.

METERS

M-1: Water Service Meter Installation
Estimated Project Cost: $592,400

Implementation of the Water Use Efficiency Rule will require Hartstene Pointe to install service meters at all connections by 2018. Although the Rule allows up to 12 years for installation, it will benefit the Community to begin the process as soon as possible. Water service meters will benefit Hartstene Pointe by providing system leakage data, and will allow billing based on usage.

SOURCE

SO-1: Well Rehabilitation
Estimated Project Cost: $24,100

The wells have not been rehabilitated since their installation and show signs of deterioration, as seen in the photos in Chapter 1. As part of the 20-year planning horizon, Hartstene Pointe will rehabilitate the existing wells.

CAPITAL IMPROVEMENT SUMMARY AND SCHEDULE

Table 8-1 provides a summary and proposed schedule of the identified projects. Costs shown in Table 8-1 are in year 2008 dollars.

TABLE 8-1

Hartstene Pointe Summary of Capital Improvement Projects

No.	Title	Year	Project Cost
D-1	Color Code Fire Hydrants	2008	$ 1,300
D-2	Leak Detection Test	2008	$ 2,000
TR-1	Arsenic Treatment Plant	2008	$ 20,100
TR-2	Stage 2 D/DBP Rule Requirements	2008	$ 20,100
M-1	Water Service Meters – Phase I	2008	$ 192,400
TR-3	WTP Environmental Control	2009	$ 13,100
M-1	Water Service Meters – Phase II	2009	$ 100,000
M-1	Water Service Meters – Phase III	2010	$ 100,000
TR-4	WTP PLC System Upgrade	2011	$ 12,600
M-1	Water Service Meters – Phase IV	2011	$ 100,000
TR-5	WTP Improvements	2012	$ 71,400
M-1	Water Service Meters – Phase V	2012	$ 100,000
ST-1	Booster Pump Station	2010	$ 272,500
6-Year Capital Improvement Total			**$1,005,500**
SO-1	Well Rehabilitation	2018	$ 24,100
D-3	Pipe Replacement	2025	$3,200,000
20-Year Capital Improvement Total			**$3,224,100**
Complete Capital Improvement Total			**$4,229,600**

CHAPTER 9

FINANCIAL ANALYSIS

INTRODUCTION

This chapter contains an analysis of Mason County's ability to meet future operating expenses and fund water improvements outlined in the previous chapters. Potential funding sources, financial status of the water utility, funding required to finance the scheduled improvements, and the impact of water system improvements on water rates are presented.

The County operates a combined water and wastewater utility, but the analysis presented in this chapter is specific to the water utility. All revenues and expenses known to be associated with the water system are fully included in the analysis.

FINANCIAL STATUS OF EXISTING WATER UTILITY

CURRENT WATER RATES

The Hartstene Pointe Community's water rates are defined in Mason County Municipal Code 13.60.020 for the year 2005 through 2008. A flat water rate is applied to all connections within the Hartstene Pointe system. Table 9-1 provides the rates for 2007 for all customers.

TABLE 9-1

Water Base Rates

	Price
Connection Charge	$360.00
Single-Family Dwelling	$ 21.50

For connections serving more than one single-family structure, house, duplex, apartment, or mobile home, an additional $8.50 per month for each additional unit is included in the monthly water rate.

HISTORICAL FINANCIAL OPERATIONS

Water utility operating revenues for the years 2002 through 2006 are summarized in Table 9-2. From the past financial data, an estimate of 2006 revenues and expenses has been calculated for use in the projections presented later in the chapter. The 2006 revenue is set by the average of the last 4 years.

TABLE 9-2

Historical Operating Revenues

Operating Revenue	2002	2003	2004	2005	2006 Est.
Water Sales	$109,485	$151,266	$114,175	$118,863	$123,000(1)
Miscellaneous	$ 19,966	$ 1,501	$ 2,240	$ 3,882	$ 4,000(2)
Total Operating Revenue	**$129,451**	**$152,767**	**$116,415**	**$122,744**	**$122,800**

(1) Estimated 2006 data is equal to the average value from 2002 – 2005.
(2) Estimated 2006 data is equal to the last year revenue rounded to the nearest hundredth.

Table 9-3 summarizes the historical operating expenses for the water system.

TABLE 9-3

Historical Operating Expenditures

Operating Expenditures	2002	2003	2004	2005	2006 Est.
Maintenance	$48,214	$180,105	$53,514	$52,514	$53,000(1)
Administration	$23,860	$ 29,585	$38,622	$33,738	$31,500(2)
Total Operating Expenses	**$72,073**	**$209,690**	**$92,303**	**$86,252**	**$84,000**

(1) Estimated 2006 data is equal to the 2005 expense value.
(2) Estimated 2006 data is equal to the average value from 2002 – 2005.

Table 9-4 summarizes the historical operating cash flow for the Hartstene Pointe water system.

TABLE 9-4

Historical Cash Flows

Summary Cash Flows	2002	2003	2004	2005	2006
(+) Total Operating Revenues(1)	$129,451	$152,767	$116,415	$122,744	$127,000
(+) Transfer from Previous Year(2)	$175,094	$232,473	$175,549	$199,661	$236,154
(-) Total Operating Expenses(3)	($ 72,073)	($209,690)	($ 92,303)	($ 86,252)	($ 84,000)
End of Year Cash	**$232,473**	**$175,549**	**$199,661**	**$236,154**	**$279,154**

(1) Operating Revenues from Table 9-2.
(2) Transfer amounts from based on historical budget records.
(3) Operating Expenses from Table 9-3.

PROJECTED OPERATING REVENUES AND EXPENSES

Table 9-5 and 9-6 present the projected operating revenues and expenses for the water utility. With the limited growth within the Hartstene Pointe Community, water sales are projected to increase according to the inflation rate.

TABLE 9-5

Projected Operating Revenues

Operating Revenue (1)	2007	2008	2009	2010	2011	2012	2013
Water Sales	$133,000	$139,000	$144,000	$150,000	$157,000	$163,000	$170,000
PWTF Loan	$ 0	$ 0	$ 0	$ 91,575	$103,544	$ 0	$252,513
Miscellaneous	$ 4,000	$ 5,000	$ 5,000	$ 5,000	$ 5,000	$ 5,000	$ 6,000
Total Operating Revenue	**$137,000**	**$144,000**	**$149,000**	**$246,575**	**$265,554**	**$168,000**	**$428,513**

(1) The account is projected using the forecast factor Inflation Rate 4.1 percent.

TABLE 9-6

Projected Operating Expenditures

Operating Expenditures	2007	2008	2009	2010	2011	2012	2013
Maintenance	$57,000	$60,000	$62,000	$ 65,000	$ 67,000	$ 70,000	$ 73,000
Administration	$34,000	$35,000	$36,000	$ 38,000	$ 39,000	$ 41,000	$ 43,000
PWTF Loan Repayment	$ 0	$ 0	$ 0	$ 0	$ 5,495	$11,662	$ 11,564
Total Operating Expenditures	**$91,000**	**$95,000**	**$98,000**	**$103,000**	**$111,495**	**$122,662**	**$127,564**

(1) The account is projected using the forecast factor Inflation Rate 4.1 percent.

Table 9-7 shows the projected operating cash flow for the water utility. In order to fund the capital improvement program, the County must acquire additional funds. These projections show fund obtained through the Public Works Trust Fund (PWTF), which is described in detail later in this chapter. Based on current projections, the County will have adequate revenue to cover its operation and maintenance budget and cover its existing debt obligations.

TABLE 9-7

Summary Projected Operating Cash Flow

Summary Operating Cash Flows	2007	2008	2009	2010	2011	2012	2013
(+)Operating Revenues[1]	$137,000	$144,000	$149,000	$155,000	$162,000	$168,000	$176,000
(+) PWTF Loan	$ 0	$ 0	$ 0	$ 91,575	$103,544	$ 0	$252,513
(-) Total Operating Expenditures[2]	($ 91,000)	($ 95,000)	($ 98,000)	($103,000)	($111,495)	($122,662)	($127,564)
Net Operating Revenue	**$ 46,000**	**$ 49,000**	**$ 51,000**	**$143,575**	**$154,060**	**$45,338**	**$300,949**

(1) Operating Revenue for the water utility is from Table 9-5, Water Sales + Miscellaneous.
(2) Total Operating Expenses for water utility is from Table 9-6.

PROJECTED CAPITAL REVENUES AND EXPENDITURES

Capital revenue has been combined in the projections for operational revenue. The only capital revenue the County receives is from service connections. The minimal connection charges are included in the miscellaneous category under operational revenue.

Table 9-8 presents the CIP projects listed in Chapter 8. The project costs in Table 9-8 have been adjusted for inflation in the year in which they are scheduled. An annual project inflation rate of 4.1 percent is used for all years.

TABLE 9-8

Projected Capital Expenditures

No.	2008	2009	2010	2011	2012	2013
D-1	($ 1,300)					
D-2	($ 2,010)					
TR-1	($ 20,120)					
TR-2	($ 20,120)					
M-1	($192,400)	($101,670)	($101,750)	($102,340)	($102,940)	
TR-3		($ 13,100)				
ST-1						($280,570)
TR-4				($12,720)		
TR-5					($77,430)	
Total	**($235,950)**	**($114,770)**	**($101,750)**	**($115,060)**	**($180,370)**	**($280,570)**

(1) Capital projects are listed in Table 8-1 and are planned to occur by 2013.
(2) Capital expenses shown have been increased from the project cost year to the year planned using an annual inflation rate of 4.1 percent.

Table 9-9 provides a summary of the projected water utility cash flow for the next 6 years.

TABLE 9-9

Projected Capital Cash Flow Summary

Summary Capital Cash Flows	2007	2008	2009	2010	2011	2012	2013
Start of Year Cash	$279,154	$325,154	$138,204	$74,343	$116,259	$155,259	$ 20,227
Transfer from Operations(1)	$ 46,000	$ 49,000	$ 51,000	$143,575	$ 154,060	$ 45,338	$300,949
Capital Expenses(2)	-	($235,950)	($114,770)	($101,750)	($ 115,060)	($180,370)	($280,570)
End of Year Cash	**$325,154**	**$138,204**	**$ 74,343**	**$116,259**	**$155,259**	**$ 20,227**	**$ 40,605**

(1) From Table 9-7.
(2) From Table 9-8.

Based on the current water utility status and the projected growth within the system, the County will need to acquire alternative funding sources to adequately fund its capital improvement plan in addition to its operations budget. The following section discusses possible alternatives to fund the CIP.

AVAILABLE FUNDING SOURCES

The projected funds are insufficient to cover the significant capital expenses required for Mason County in 2009 and 2010. The following sources may be beneficial to assist in project funding.

Grants: Community Development Block Grant (CDBG)
US Economic Development Administration (US EDA)
USDA Rural Development (RD)

Loans: Public Works Trust Fund (PWTF)
Community Economic Revitalization Board (CERB)
Drinking Water State Revolving Fund (DWSRF)
USDA Rural Development (RD)

Bonds: Revenue Bonds
General Obligation Bonds

COMMUNITY DEVELOPMENT BLOCK GRANT (CDBG)

The Community Development Block Grant program is a competitive source of federal funding for a broad range of community development projects. A primary requirement of the CDBG program is that the project must principally benefit at least 51 percent of the low-to-moderate income residents of the project area. The State typically receives about $7 million in federal funds per funding cycle. CDBG has two programs including

General Purpose and Planning Only. The General Purpose program provides grant funds for the design, construction, or reconstruction of water and sewer systems up to the amount of $750,000. The Planning Only program includes projects such as comprehensive plans, community development plans, capital improvement plans, and other plans such as land use and urban environmental design, economic development, floodplain and wetlands management, transportation, and utilities. Planning only grants are limited to $24,000 for a single applicant or $40,000 for a joint applicant.

Eligible applicants for the CDBG programs include cities and towns with less than 50,000 people or counties with populations less than 200,000. Though port districts and economic development districts are not eligible to apply directly, a city or county can submit a joint application and include these entities as partners. The Office of Financial Management estimates that the population of Mason County in 2025 will be 75,088. Therefore, the County qualifies for the CDBG program.

PUBLIC WORKS TRUST FUND (PWTF)

The Public Works Trust Fund is a revolving loan fund designed to help local governments finance public works projects through low-interest loans and technical assistance. The PWTF, established in 1985 by legislative action, offers loans substantially below market rates, payable over periods ranging up to 20 years. To be eligible for the PWTF programs, an applicant must be a local government such as a city, county, or a special purpose utility district.

PWTF has four loan programs including Construction, Preconstruction, Planning, and Emergency. PWTF loan terms are summarized below:

Public Works Trust Fund Loan Types & Terms

Loan Type	Local Match	Interest Rate	Term	Loan Limit
Construction	15%	0.50%	20 Years	$10,000,000
	10%	1.00%	20 Years	$10,000,000
	5%	2.00%	20 Years	$10,000,000
Pre-Construction(1)	15%	0.50%	20 Years	$ 1,000,000
	10%	1.00%	20 Years	$ 1,000,000
	5%	2.00%	20 Years	$ 1,000,000
Planning(2)	0%	0.00%	6 Years	$ 50,000
Emergency(2)	0%	4.00%	20 Years	$ 500,000

(1) Preconstruction loans can be refinanced to a 20-year term, if the applicant obtains a subsequent PWTF Construction loan.

(2) While a match is not required, it is recommended.

The Construction Program accepts applications once per year in the spring, and the money becomes available approximately one year later. The Preconstruction and Planning programs are open on a year-round basis and must be submitted to the Public

Works Board prior the 15th of the month to be reviewed at the next Board meeting. These funds become available shortly after the Public Works Board makes their final decision as to the award. Emergency projects must have a locally declared emergency and are applied for on an open cycle depending on the availability of funds. Project expenditures are reimbursable from the date of the declared emergency.

An applicant must have a long-term plan for financing its public works needs. If the applicant is a county or city, it must adopt the 1/4 percent real estate excise tax that is dedicated to public works construction projects. Eligible public works projects include streets and roads, bridges, storm sewers, sanitary sewer collection and treatment systems, and domestic water. Loans are presently offered only for purposes of repair, replacement, rehabilitation, reconstruction, or improvement of existing eligible public works systems. Eligible project costs can include expenses related to serving 20-year forecasted growth as identified in growth management comprehensive plans.

Since substantially more trust fund dollars are requested than are available, local jurisdictions must compete for the available funds. The applications are carefully evaluated, and the Public Works Boards submits a prioritized list of those projects to the Legislature that are recommended to receive low-interest financing. The Legislature reviews the list and indicates its approval through the passage of an appropriation from the Public Works Assistance Account to cover the cost of the proposed loans. Once the Governor has signed the appropriation bill into law (an action that usually occurs by the following April), those local governments recommended to receive loans are offered a formal loan agreement with appropriate interest rates and terms as determined by the Public Works Board.

COMMUNITY ECONOMIC REVITALIZATION BOARD (CERB)

The Community Economic Revitalization Board's prime mission is to partner with business and industry and local governments to maintain and create jobs. Established by the Legislature in 1982, CERB provides low-interest loans or, in unique circumstances, grants to help finance local public infrastructure necessary to develop or retain stable business and industrial activities. Projects eligible for funding include roads, domestic and industrial waters systems, sanitary and storm sewers, port facilities, and general purpose industrial buildings.

Typically, CERB provides loans in the amount of $1 million and, where applicable, grants in the amount of $300,000. The interest rate is tied to the current cost of a 10-year bond and a local match of 10 percent is required.

Eligible applicants include Washington State subdivisions in partnership with private enterprise. If there is no economic partner, a local government can produce a feasibility study that documents realistic job retention or creation. Applications must be submitted 45 days prior to a regularly scheduled CERB Meeting, which typically meets in January, March, July, and November

DRINKING WATER STATE REVOLVING FUND (DWSRF)

In 1996, Congress established the Drinking Water State Revolving Fund through the reauthorization of the federal Safe Drinking Water Act. The program is managed by both the Washington State Department of Health and the Washington State Public Works Board. The purpose of the program is to provide low-interest loans to assist publicly- and privately-owed water systems improve drinking water and protect public health.

Eligible publicly-owned water systems include city and county governments, public utility districts, and special purpose districts. Privately-owned systems are eligible as long as they are a Group A system.

Eligible projects include the following:

- Water systems that exceed health standards;
- Replacement of aging infrastructure;
- Acquisition of real property;
- Planning and design costs;
- Water conservation projects;
- Reservoirs (clear wells) that are part of a treatment process;
- Distribution reservoirs (finished water);
- Existing systems who chose to connect to a municipal system; and
- Upgrade to or creation of a Group A system.

Maximum award per single water system is $3,000,000 and for combining systems an award of $6,000,000 is available. DWSRF requires a 2 percent loan fee, but no local match. A summary of interest rates and loan terms follows:

Drinking Water State Revolving Fund Loan Terms

Applicant's Income Level	Interest Rate	Repayment period
Water system not financial distressed	2.5% Fixed	20 years or life of project, whichever is less
Water system in distressed county	1.5% Fixed	20 years or life of project, whichever is less
Income survey results demonstrates that 51 percent of the households are at 80 percent or below the county's median household income.	1.5% Fixed	20 years or life of project, whichever is less
Income survey results demonstrates that 51 percent of the households are at 50 percent or below the county's median household income.	0.0% Fixed	30 years or life of project, whichever is less

USDA RURAL DEVELOPMENT, RURAL UTILITIY SERVICES (RUS) – WATER AND WASTEWATER

The RD Rural Utility Service administers water and wastewater loan and grant program to improve the quality of life and promote economic development in rural areas.

Rural Development has a loan program that, under certain conditions, includes a limited grant program. Grants may be awarded when the annual debt service portion of the utility rate exceeds 1.0 percent to 1.5 percent of the municipality's median household income.

In addition, RD has a loan program for needy communities that cannot obtain funding by commercial means through the sale of revenue bonds. The loan program provides 30- to 40-year loans at an interest rate that is based on federal rates and varies with the commercial market. RD loans are revenue bonds with a 1.1 debt coverage factor.

Eligible projects include the construction, expansion, extension or improvement of rural water, sanitary sewers, solid waste disposal, storm, and wastewater disposal facilities.

Basic criteria for RD funding as follows:

- Dependent on inability to obtain funds from other sources at reasonable terms.
- A 45 percent grant is available if the median household income of the service area exceeds 80 percent of the statewide non-metropolitan median household income.
- A 75 percent grant is eligible if the service area is below the higher of the poverty line or 80 percent of the state non-metropolitan median household income, and the project is necessary to alleviate a health and safety issue.

Eligible applicants include municipalities; counties; non-profit corporations, associations, or cooperatives; and federally recognized Indian tribes in rural areas with populations less than 10,000.

REVENUE BONDS – WATER AND WASTEWTER

The most common source of funds for construction of major utility improvements is the sale of revenue bonds. These are tax-free bonds issued by a County. The major source of funds for debt service on revenue bonds is from monthly sewer service charges. In order to make qualify to sell revenue bonds marketable to investors, the bonds typically have contractual provisions for the County to meet debt coverage requirements. The County must show that its annual net operating income (gross income less operation and

maintenance expenses) is must be equal to or greater than a factor, typically 1.2 – 1.4 times the annual debt service on all par debt. If a coverage factor has not been specified it will be determined at the time of any future bond issues.

GENERAL OBLIGATION BONDS – WATER AND WASTEWATER

A County may issue general obligation bonds to finance almost any projects of general benefit to the County. The bonds are repaid by tax assessments levied against all privately owned properties within the County. This includes vacant property that would not otherwise contribute to the cost of the specific improvements. This type of bond issue is usually reserved for municipal improvements that are of general benefit to the public, such as arterial streets, bridges, lighting, municipal buildings, firefighting equipment, parks, and water and wastewater facilities. General obligation bonds are the most attractive bonds to investors because they are backed by the municipality's full taxing authority and carry the lowest rate of interest of any type of bond that a County may issue.

Disadvantages of general obligation bonds include the following:

- Voter approval is often required. The County will incur the legal costs of drafting a ballot measure and pay for the cost of holding a special election. There is also the additional cost of investing staff time in public education of the need for the project, yet there is always uncertainty to the outcome of elections.

- There are legal, as well as practical limits on the amount of general obligation debt a County can issue. Financing capital improvements through general obligation debt reduces the ability of the County to issue additional general obligation debt, which is often the only source of outside financing for many general government facilities.

SUMMARY

An alternative funding source, such as pursuing loans, issuing revenue bonds, increasing GFCs, and/or increasing rates, must be implemented in order to fund the capital improvement plan. The County is only generating approximately $50,000 per year in revenue, and currently has a total water fund balance under $300,000. The 6-year CIP totals $1,005,500 in project costs in today's dollars and a total cost of $1,012,310 in the years planned. During this period, the County will likely receive minimal revenue profits from connection fees. The County will incur additional debt to completely fund the CIP.

APPENDICES

Appendix A ..... WFI
Appendix B ..... Water Rights Certificate
Appendix C ..... Hartstene Pointe Rules and Regulations
Appendix D ..... Customer Complaint Form
Appendix E ..... Water Quality Report and Testing Results
Appendix F ..... Coliform Monitoring Plan
Appendix G ..... Water Rights Self Assessment
Appendix H ..... Water System Modeling Results
Appendix I ..... Getting Started: Water Use Efficiency Guidebook
Appendix J ..... Water Conservation Brochures
Appendix K ..... Susceptibility Assessment Survey Forms
Appendix L ..... Sample Spill Response Notification Letter
Appendix M ..... Maintenance Records and Emergency Contact List
Appendix N ..... Boil Water Notice
Appendix O ..... Cross Connection Control Program and Resolution
Appendix P ..... Construction Standards
Appendix Q ..... Construction Completion Report
Appendix R ..... Preliminary Cost Estimates
Appendix S ..... DOH Documents

Appendix A

WFI

Washington State Department of Health
Division of Environmental Health
Office of Drinking Water

WATER FACILITIES INVENTORY (WFI) FORM

ONE FORM PER SYSTEM

Quarter 2
Updated: 08/20/2007
Printed: 12/18/2007
WFI Printed For: On-demand
Submission Reason: Non-Periodic update

RETURN TO: Southwest Regional Office, PO Box 47823, Olympia, WA, 98504

1. SYSTEM ID NO	2. SYSTEM NAME	3. COUNTY	4. GROUP	5. TYPE
31569 0	HARTSTENE POINTE	MASON	A	Comm

6. PRIMARY CONTACT NAME & MAILING ADDRESS

THOMAS V. MOORE [MANAGER]
PO BOX 1850
SHELTON, WA 98584

STREET ADDRESS IF DIFFERENT FROM ABOVE
ATTN
ADDRESS 171 EAST SHORE DRIVE
CITY GRAPEVIEW STATE WA ZIP 98546-9300

7. OWNER NAME & MAILING ADDRESS — **8. Owner Number** 000382

MASON COUNTY UTILITIES & WASTE MGMT
THOMAS V. MOORE TITLE: WS MANAGER
PO BOX 1850
SHELTON, WA 98584

STREET ADDRESS IF DIFFERENT FROM ABOVE
ATTN
ADDRESS 110 NORTH FOURTH STREET
CITY SHELTON STATE WA ZIP 98584

9. 24 HOUR PRIMARY CONTACT INFORMATION		10. OWNER CONTACT INFORMATION	
Primary Contact Daytime Phone:	(360) 427-9670 x652	Owner Daytime Phone:	(360) 427-9670 x771
Primary Contact Mobile/Cell Phone:	(360) 490-0396	Owner Mobile/Cell Phone:	(360) 490-2378
Primary Contact Evening Phone:	(xxx)-xxx-xxxx	Owner Evening Phone:	(xxx)-xxx-xxxx
Fax: (360) 427-7772	E-mail: tommo@co.mason.wa.us	Fax: (360) 427-7772	E-mail: tommo@co.mason.wa.us

WAC 246-290-420(9) requires that water systems provide 24-hour contact information for emergencies.

11. SATELLITE MANAGEMENT AGENCY - SMA (check only one)

- [x] Not applicable (Skip to #12)
- [ ] Owned and Managed
- [ ] Managed Only
- [ ] Owned Only

SMA NAME: _____ SMA Number: _____

12. WATER SYSTEM CHARACTERISTICS (mark ALL that apply)

- [ ] Agricultural
- [ ] Commercial / Business
- [ ] Day Care
- [ ] Food Service/Food Permit
- [ ] 1,000 or more person event for 2 or more days per year
- [ ] Hospital/Clinic
- [ ] Industrial
- [ ] Licensed Residential Facility
- [ ] Lodging
- [x] Recreational / RV Park
- [x] Residential
- [ ] School
- [ ] Temporary Farm Worker
- [ ] Other (church, fire station, etc.): _____

13. WATER SYSTEM OWNERSHIP (mark only one)

- [ ] Association
- [x] City / Town
- [ ] County
- [ ] Federal
- [ ] Investor
- [ ] Private
- [ ] Special District
- [ ] State

14. STORAGE CAPACITY (gallons): 188,000

15	16 SOURCE NAME	17 INTERTIE	18 SOURCE CATEGORY										19 USE			20	21 TREATMENT						22 DEPTH	23	24 SOURCE LOCATION			
Source Number	LIST UTILITY'S NAME FOR SOURCE AND WELL TAG ID NUMBER. Example: WELL #1 XYZ456 IF SOURCE IS PURCHASED OR INTERTIED, LIST SELLER'S NAME Example: SEATTLE	INTERTIE SYSTEM ID NUMBER	WELL	WELL FIELD	WELL IN A WELL FIELD	SPRING	SPRING FIELD	SPRING IN SPRINGFIELD	SEA WATER	SURFACE WATER	RANNEY / INF. GALLERY	OTHER	PERMANENT	SEASONAL	EMERGENCY	SOURCE METERED	NONE	CHLORINATION	FILTRATION	FLUORIDATION	IRRADIATION (UV)	OTHER	DEPTH TO FIRST OPEN INTERVAL IN FEET	CAPACITY (GALLONS PER MINUTE)	1/4, 1/4 SECTION	SECTION NUMBER	TOWNSHIP	RANGE
S01	WELL #1 AHB601		X										X			Y		X	X			X	170	75	SW SW	19	21N	01W
S02	WELL #2 AHB690		X										X			Y		X	X			X	148	98	SW SW	19	21N	01W
S03	InAct 05/21/2007 WELL #3 NO WEL		X												X	N	X							0	SW SW	19	21N	01W

WATER FACILITIES INVENTORY (WFI) FORM - Continued

1. SYSTEM ID NO	2. SYSTEM NAME	3. COUNTY	4. GROUP	5. TYPE
31569 0	HARTSTENE POINTE	MASON	A	Comm

	ACTIVE SERVICE CONNECTIONS	DOH USE ONLY! CALCULATED ACTIVE	DOH USE ONLY! APPROVED CONNECTIONS
25. SINGLE FAMILY RESIDENCES (How many of the following do you have?)	0	433	497
A. Full Time Single Family Residences (Occupied 180 days or *more* per year)	158		
B. Part Time Single Family Residences (Occupied *less than* 180 days per year)	185		
26. MULTI-FAMILY RESIDENTIAL BUILDINGS (How many of the following do you have?)			
A. Apartment Buildings, condos, duplexes, barracks, dorms	45		
B. Full Time Residential Units in the Apartments, Condos, Duplexes, Dorms that are occupied *more than* 180	18		
C. Part Time Residential Units in the Apartments, Condos, Duplexes, Dorms that are occupied *less than* 180	72		
27. NON-RESIDENTIAL CONNECTIONS (How many of the following do you have?)			
A. Recreational Services and/or Transient Accommodations (Campsites, RV sites, hotel/motel/overnight units)	6	6	0
B. Institutional, Commercial/Business, School, Day Care, Industrial Services, etc.	3	3	0
28. TOTAL SERVICE CONNECTIONS		442	497

29. FULL-TIME RESIDENTIAL POPULATION

A. How many residents are served by this system 180 or *more* days p 306

30. PART-TIME RESIDENTIAL POPULATION	JAN	FEB	MAR	APR	MAY	JUN	JUL	AUG	SEP	OCT	NOV	DEC
A. How many part-time residents are present each month?	20	20	20	45	150	250	250	250	150	45	20	20
B. How many days per month are they present?	8	8	8	8	8	14	14	14	8	8	8	8

31. TEMPORARY & TRANSIENT USERS	JAN	FEB	MAR	APR	MAY	JUN	JUL	AUG	SEP	OCT	NOV	DEC
A. How many total visitors, attendees, travelers, campers, patients or customers have access to the water system each month?	300	300	300	750	1100	1100	1100	1100	1100	750	300	300
B. How many days per month is water accessible to the public?	30	30	30	30	30	30	30	30	30	30	30	30

32. REGULAR NON-RESIDENTIAL USERS	JAN	FEB	MAR	APR	MAY	JUN	JUL	AUG	SEP	OCT	NOV	DEC
A. If you have schools, daycares, or businesses connected to your water system, how many students daycare children and/or employees are present each month?												
B. How many days per month are they present?												

33. ROUTINE COLIFORM SCHEDULE	JAN	FEB	MAR	APR	MAY	JUN	JUL	AUG	SEP	OCT	NOV	DEC
	1	1	1	1	1	1	1	1	1	1	1	1

35. Reason for Submitting WFI:

☐ Update - Change ☐ Update - No Change ☐ Inactivate ☐ Re-Activate ☐ Name Change ☐ New System ☐ Other _____

36. I certify that the information stated on this WFI form is correct to the best of my knowledge.

SIGNATURE: _____ **DATE:** _____

PRINT NAME: _____ **TITLE:** _____

Appendix B

Water Rights Certificate

STATE OF WASHINGTON
DEPARTMENT OF ECOLOGY

REPORT OF EXAMINATION
TO APPROPRIATE PUBLIC WATERS OF THE STATE OF WASHINGTON

☐ SURFACE WATER ☒ GROUND WATER

APPLICATION NO.	PRIORITY DATE OF APPLICATION
G2-23123	September 5, 1974

NAME
THE QUADRANT CORPORATION

ADDRESS (STREET)	(CITY)	(STATE)	(ZIP CODE)
NE 8th @ 112th NE	Bellevue	Washington	98009

PUBLIC WATERS TO BE APPROPRIATED

SOURCE
2 wells

TRIBUTARY OF (IF SURFACE WATERS)

MAXIMUM CUBIC FEET PER SECOND	MAXIMUM GALLONS PER MINUTE	MAXIMUM ACRE-FEET PER YEAR
	150	240

QUANTITY, TYPE OF USE, PERIOD OF USE
240 acre-feet per year community domestic supply continuously

LOCATION OF DIVERSION/WITHDRAWAL

APPROXIMATE LOCATION OF DIVERSION/WITHDRAWL
North 23°45' east 1570 and 1580 feet from the southwest corner of Sec. 19

LOCATED WITHIN (SMALLEST LEGAL SUBDIVISION)	SECTION	TOWNSHIP N.	RANGE, E. OR W. W.M.	W.R.I.A.	COUNTY
SW¼	19	21	1 W	14	Mason

RECORDED PLATTED PROPERTY

LOT	BLOCK	OF (GIVE NAME OF PLAT OR ADDITION)
202		Harstene Pointe

LEGAL DESCRIPTION OF PROPERTY WATER TO BE USED ON

Plat of Harstene Pointe, Additions 1, 3, 4, 7, 8, 9, and 10; AND SW¼SW¼; ALL within Sec. 19, T. 21 N., R. 1 W.W.M.

DESCRIPTION OF PROPOSED WORKS

Well No. 1: 8" x 170'±
Well No. 2: 8" x 200'

DEVELOPMENT SCHEDULE

BEGINNING DATE	COMPLETION DATE	DATE COMPLETE APPLICATION OF WATER TO BE MADE
Started	Completed	March 1, 1977

PROVISIONS AND RECOMMENDATIONS

This application is for the purpose of obtaining an additional and standby water supply for a community domestic water system consisting of 534 services.

For a development of this magnitude and nature in this locale, 450 gallons per day per service will meet the water demand of each service. For 534 services, this amounts to 267 acre-feet per year.

The applicant has an existing Ground Water Certificate No. G2-01016C in the amount of 110 gallons per minute and 44 acre-feet of water annually.

Use of the waters to be appropriated under this application will be for a public water supply. State Board of Health rules require every owner of a public water supply to obtain written approval from the Water Supply and Waste Section, Health Services Div., PO Box 1788, Olympia, WA 98504 prior to any new construction or alterations of a public water supply.

The installation of an access port as described in attached Ground Water Bulletin No. 1 shall be required prior to issuance of final certificate of water right. The applicant may for his own convenience, wish to install an airline and gage in addition to the access port.

Applicant is advised that notice of proof of appropriation of water (under which final certificate of water right issues) should not be filed until the permanent diversion facilities have been installed together with a mainline system capable of delivering the recommended quantity of water to an existing or proposed distribution system within the area to be served.

Accordingly, this application may be approved for 150 gallons per minute on a continuous basis and 240 acre-feet annually; 223 acre-feet being a primary right and 17 acre-feet as a supplementary supply to Ground Water Certificate No. G2-01016C; provided that the total withdrawal under all rights shall not exceed 267 acre-feet per year.

Signed at Olympia, Washington,
this 6th day of February, 1976.

WALTER BERGSTROM, Resources Management
Department of Ecology

Report of Examination on Ground Water (office)

Received date July 21, 1964 Date of exam. November 4, 1964 / Appl. No. 7273

Name Weyerhaeuser Properties, Inc. Address P.O. Box 1645, Tacoma, Washington

Type of works a well Dimensions 8" x 158'

Progress of works Well drilled, system not installed

Quantity applied for 110 g.p.m. acre-feet per year

Legal sub SW¼SW¼ Sec. 19 Twp. 21 N. Rge. 1 W.W.M. County Mason

Use Community domestic supply

Irrigation-acreage: Present Planned Feasible

Municipal: Population To be determined ~~xxxx~~ upon receipt of plat

Industrial

Time pump will be operated continuously

Other water rights appurtenant to this land None

Proximity to existing works, springs, wells, or streams Tierney, northwesterly 1180 feet, more or less.

Area Sub-area Zone

RECOMMENDATIONS

Approved for 110 g.p.m. 44 acre-feet per year, subject to existing water rights. (1 acre-foot 325,850 gallons.)

Annual quantity is based on withdrawal of 110 gallons per minute for 25% of the time. Final Certificate will be issued for a quantity commensurate to the population served. Before Certificate issues applicant must file a plat of property to be served, noting which lots are connected to the distribution system.

No field examination has been made at this time because of temporary curtailment of ferry service. After field exam, any necessary changes in the permit will be made. Previous examination of the area has shown that there should be no major affect to existing systems and permit should issue as recommended.

The installation of an access port to well as described in attached Ground Water Bulletin No. 1 is recommended.

(over)

Use of the waters to be appropriated under this application will be for a public water supply. State Board of Health rules require every owner of a public water supply to obtain written approval from the State Director of Health prior to any new construction or alterations of a public water supply. The applicant is advised to contact the Washington State Department of Health, Fourth Floor, Public Health Building, Olympia, with regard to the need for compliance.

Signed at Olympia, Washington
on this 6 day of November, 1964.

JOHN B. NOBLE, Geologist
Division of Water Resources

STATE OF WASHINGTON
DEPARTMENT OF ECOLOGY

CERTIFICATE OF WATER RIGHT

☐ Surface Water (Issued in accordance with the provisions of Chapter 117, Laws of Washington for 1917, and amendments thereto, and the rules and regulations of the Department of Ecology.)

☒ Ground Water (Issued in accordance with the provisions of Chapter 263, Laws of Washington for 1945, and amendments thereto, and the rules and regulations of the Department of Ecology.)

PRIORITY DATE	APPLICATION NUMBER	PERMIT NUMBER	CERTIFICATE NUMBER
September 5, 1974	G 2-23123	G 2-23123 P	G 2-23123 C

NAME
THE QUADRANT CORPORATION

ADDRESS (STREET)	(CITY)	(STATE)	(ZIP CODE)
Box C	Tacoma	Washington	98401

This is to certify that the herein named applicant has made proof to the satisfaction of the Department of Ecology of a right to the use of the public waters of the State of Washington as herein defined, and under and specifically subject to the provisions contained in the Permit issued by the Department of Ecology, and that said right to the use of said waters has been perfected in accordance with the laws of the State of Washington, and is hereby confirmed by the Department of Ecology and entered of record as shown.

PUBLIC WATER TO BE APPROPRIATED

SOURCE
2 wells

TRIBUTARY OF (IF SURFACE WATERS)

MAXIMUM CUBIC FEET PER SECOND	MAXIMUM GALLONS PER MINUTE	MAXIMUM ACRE-FEET PER YEAR
	150	240

QUANTITY, TYPE OF USE, PERIOD OF USE		
240 acre-feet per year	community domestic supply	continuously

LOCATION OF DIVERSION/WITHDRAWAL

APPROXIMATE LOCATION OF DIVERSION--WITHDRAWAL
North 23°45' east 1570 and 1580 feet from the southwest corner of Sec. 19

LOCATED WITHIN (SMALLEST LEGAL SUBDIVISION)	SECTION	TOWNSHIP N.	RANGE E. OR W.E.W.M.	W.R.I.A.	COUNTY
SW¼	19	21	1 W	14	Mason

RECORDED PLATTED PROPERTY

LOT	BLOCK	OF (GIVE NAME OF PLAT OR ADDITION)
Hartstene Pointe		

LEGAL DESCRIPTION OF PROPERTY ON WHICH WATER IS TO BE USED

Plat of Hartstene Pointe, Additions 1, 3, 4, 7, 8, 9, and 10; AND SW¼SW¼; ALL within Sec. 19, T. 21 N., R. 1 W.W.M.

PROVISIONS

The access port shall be maintained at all times on the well (s).

The total withdrawal under all rights shall not exceed 267 acre-feet per year.

The right to the use of the water aforesaid hereby confirmed is restricted to the lands or place of use herein described, except as provided in RCW 90.03.380, 90.03.390, and 90.44.020.

This certificate of water right is specifically subject to relinquishment for nonuse of water as provided in RCW 90.14.180.

Given under my hand and the seal of this office at Olympia *Washington, this* 3 *day of* March *19* 81

DONALD W. MOOS, Director
Department of Ecology

ENGINEERING DATA
OK WB 2-19-81
OK 2-20-81

by E.W. Asselstine
E.W. Asselstine, Regional Manager

FOR COUNTY USE ONLY

STATE OF WASHINGTON
DEPARTMENT OF ECOLOGY

CERTIFICATE OF WATER RIGHT

☐ *Surface Water* (issued in accordance with the provisions of Chapter 117, Laws of Washington for 1917 and amendments thereto, and the rules and regulations of the Department of Ecology)

☒ *Ground Water* (issued in accordance with the provisions of Chapter 263, Laws of Washington for 1945, and amendments thereto, and the rules and regulations of the Department of Ecology)

CERTIFICATE NUMBER	PERMIT NUMBER	APPLICATION NUMBER	PRIORITY DATE
G2-01016C	6836	7273	

NAME
THE QUADRANT CORP.

ADDRESS (STREET)	CITY	STATE	ZIP CODE
NE 8th at 112th NE	Bellevue	Washington	98009

This is to certify that the herein named applicant has made proof to the satisfaction of the Department of Ecology of a right to the use of the public waters of the State of Washington as herein defined, and under and specifically subject to the provisions contained in the Permit issued by the Department of Ecology, and that said right to the use of said waters has been perfected in accordance with the laws of the State of Washington, and is hereby confirmed by the Department of Ecology and entered of record as shown ...

PUBLIC WATER TO BE APPROPRIATED

SOURCE
well

TRIBUTARY (IF SURFACE WATERS)

MAXIMUM CUBIC FEET PER SECOND	MAXIMUM GALLONS PER MINUTE	MAXIMUM ACRE-FEET PER YEAR
	110	44

QUANTITY, TYPE OF USE, PERIOD OF USE
44 acre-feet per year community domestic supply continuously

LOCATION OF DIVERSION/WITHDRAWAL

APPROXIMATE LOCATION OF DIVERSION-WITHDRAWAL
1200 feet north and 300 feet east of the southwest corner of Sec. 19

LOCATED WITHIN (SMALLEST LEGAL SUBDIVISION)	SECTION	TOWNSHIP N.	RANGE, E. OR W. W.M.	W.R.I.A.	COUNTY
SW¼SW¼	19	21	1 W	14	Mason

RECORDED PLATTED PROPERTY

LOT	BLOCK	OF (GIVE NAME OF PLAT OR ADDITION)

LEGAL DESCRIPTION OF PROPERTY WATER TO BE USED ON

Plats of Harstaine Points within Government Lots 1, 2, 3, 4, and 5; AND SW¼SW¼ AND Government Lot 6; ALL in Sec. 19, T. 21 N., R. 1 W.W.M.

PROVISIONS

The right to the use of the water aforesaid hereby confirmed is restricted to the lands or place of use herein described, except as provided in RCW 90.03.380, 90.03.390, and 90.44 020.

This certificate of water right is specifically subject to relinquishment for nonuse of water as provided in RCW 90.14.180.

Given under my hand and the seal of this office at Olympia, Washington, this 21st *day of* November *19* 75

JOHN A. BIGGS, *Director*
Department of Ecology

ENGINEERING DATA
OK D

by E. W. Asselstine
E. W. Asselstine, Regional Manager

FOR COUNTY USE ONLY

Appendix C

Hartstene Pointe Rules and Regulations

Hartstene Pointe Maintenance Association

"This document was carefully prepared, however it is displayed for convenience only and in any/all disputes, the original document, kept in the HPMA Offices and as recorded in the Mason County Courthouse, shall prevail."

HPMA

RULES & REGULATIONS

Table of Contents

Abbreviations

Definitions

Article I – Enforcement

Section 1 – Violations Generally

Section 2 – Penalty for Violations

Section 3 – Access to Property

Section 4 – Lien on Property

Section 5 – Patrol Officer Powers

Article II - Enforcement Procedure

Section 1 – ACC / Board Review Panel / BOD Authority, Philosophy"

Section 2 – Owner Complaint Procedure

Section 3 – "Notice of Violation"

Section 4 – Action appeal Procedure

Section 5 – ACC/Review Board Notice of Affect

Section 6 – BOD Complaint Process

Section 7 – Manager Complaint Duties

Section 8 – Authority may Impose Fine

Section 9 – Appeal to BOD

Article III – Architectural Control

Section 1 – CC&R Article VI Incorporated

Section 2 – Plan Submission to the ACC

Section 3 – Tree Removal Arbitration Procedure

Section 4 – Rule Violation / Enforcement

Article IV – Land Use Restrictions

Section 1 – CC&R Article VII Incorporated

Section 2 – Garbage/Recycling Rules

Section 3 – RV Storage

Section 4 – Recreation & Utility Vehicle Permit

Section 5 – RV Use on Real Property

Section 6 – Fuel Tank Rules

Section 7 – Preamble

Section 7 – Tree/Vegetation Land Use

Section 8 – Landscape/Building Permit Posted

Section 9 – Sign Rules

Section 10 – Vehicle Parking Rules

Section 11 – Garbage/Litter Rules

Section 12 – Rule Violation / Enforcement

Article V – Building Restrictions

Section 1 – CC&R Article VIII Incorporated

Section 2 – Set Back Requirements

Section 3 – Residence must be built first

Section 4 – Survey Requirements

Section 5 – Owner Responsible For Work & Damage

Section 6 – Trash, Debris, Waste Management

Section 7 – Rule Violation / Enforcement

Article VI – Traffic Control

Section 1 – Vehicle Operation Responsibility

Section 2 – Pedestrian Right of Way

Section 3 – Operators License / Lights

Section 4 – 15 MPH Speed Limit

Section 5 – No Vehicle on Trails / Motorcycles

Section 6 – Vehicle Mufflers

Section 7 – No Vehicle on Beaches

Section 8 – Rule Violation / Enforcement

Article VII – Gate Control

Section 1 – No Trespassing at Pointe

Section 2 – Gate Access & Card Rules

Section 3 – No Gate Tampering

Section 4 – Guest Gate Access Rules

Section 5 - In Case Rights to Common Area are Suspended

Section 6 – Rule Violation / Enforcement

Article VIII – Facilities / Amenities Rules

Section 1 – BOD shall promulgate & Post Rules

Section 2 – Facilities Accessible To All Owners

Section 3 – Facilities & Common Area Rules

Section 4 – Facility Rules For Groups

Section 5 – Rule Violation / Enforcement

Article IX – Personal Conduct

Section 1 – Owners Responsible For Guests

Section 2 – Disturbing Conduct/Noise Rule

Section 3 – Security Alarm rule

Section 4 – Fire Regulation Rule Compliance

Section 5 – Fireworks Regulations

Section 6 – No Outdoor Fires Permitted

Section 7 – Dog / Leash Rules

Section 8 – Rule Violation / Enforcement

Article X – Wildlife Control

Section 1 – All Wildlife Are Protected

Section 2 – No Hunting or Taking of Wildlife

Section 3 – No Feeding of Wildlife

Section 4 – Rule Violation / Enforcement

Article XI – Property Use Registration

Section 1 – Registration of Renters

Section 2 – Pointe Rules Posted

Section 3 – Property Owner Responsible

Section 4 – Exterior Fire Warning

Section 5 – Notify Owner of violation

Section 6 – Rule Violation / Enforcement

Article XII – Use of Indian Cove / Moorage

Section 1 – Harbormaster Authority

Section 2 – Vessel Registration / Moorage

Section 3 – Identity Decal Affixed

Section 4 – Guests Subject to HPMA Rules

Section 5 – No Commercial Use of Slips

Section 6 – Slip Cleanliness Rules

Section 7 – Harbormaster Access to Vessel

Section 8 – Fishing From Dock

Section 9 – Designated Loading Area

Section 10 - Rule Violation / Enforcement

Article XIII – Sanitary Sewage Disposal

Section 1 – Dwelling Vehicle Waste Rules

Section 2 – No Waste Dumped on Grounds, No Vehicle Storage on Lot

Section 3 – Dwelling Vehicle Use Permit

Section 4 – Permit Revocation Rules

Section 5 – One Sewer Connection Allowed

Section 6 – No Tenting Allowed

Section 7 – No Outdoor Fires Allowed

Section 8 – Rule Violation / Enforcement

Article XIV – Adoption of Rules

Table I - Schedule of Fines

Appendix D

Customer Complaint Form

Complaints and concerns

Date and time report written: _____

Name of reporting party, Pointe address/ phone number:

_____

_____

Location of violation: _____

Nature of Violation: _____

Date and time report submitted: _____

Name and Pointe address of Violator:

_____

_____

Please briefly describe your complaint and any action taken: _____

_____

_____

_____

_____

_____

_____

_____

_____

_____

_____

_____

Signature: _____

Revised 7/22/05

Appendix E

Water Quality Report and Testing Results

HARTSTENE POINTE ID #31569 0
WATER SYSTEM CONSUMER CONFIDENCE REPORT 2007

June 2008

WATER SYSTEM MANAGER'S STATEMENT

The Consumer Confidence Rule is a federal requirement created by Congress and the Environmental Protection Agency. As a result the Mason County Department of Utilities and Waste Management is required to provide customers of the Hartstene Pointe Water System with this report. Herein we will provide you with information on the results of our compliance and water quality testing, the health effects of any contaminates found during this monitoring, and who to call in case of emergencies, loss of water service, water leaks, and billing questions. We are reporting results from the monitoring performed during 2007 calendar year.

ABOUT THE SYSTEM

The Mason County Department of Utilities and Waste Management employs five full time operators certified by the State of Washington to operate and maintain the water and wastewater systems the County owns, one of which is Hartstene Pointe. There is a certified operator on duty every day of the week to monitor our systems. Hartstene Pointe gets its water from two wells located on opposite ends of the Community Clubhouse. Well #1 is located near the mailroom and Well #2 near the tennis courts. Both wells are filtered to remove or reduce naturally occurring contaminates. There is an 188,000-gallon water storage tank (standpipe) at the end of the RV storage area off Nantucket.

CROSS-CONNECTION CONTROL PROGRAM

If you have an automated sprinkler system, a direct method of filling a swimming pool or spa, or any other apparatus, fixture, existing backflow device, or other condition that may cause contaminates to backflow into the water system, you may be affected. Please contact Tom Moore at 360-432-5652.

WHO DO I CALL WITH A PROBLEM?

To report a problem with your water service, billing statement or to report suspected leaks during regular office hours (8:00 AM to 5:00 PM Mon-Fri) call 360-427-9670 ext. 283. After hours emergency please call 911. For technical information or water saving tips call Tom Moore at extension 652. For HPMA security call 360-490-6152.

ARE THERE CONTAMINATES IN MY WATER?

Drinking water including bottled water, may reasonably be expected to contain at least some small amounts of minerals, organics, or chemicals, called contaminates. **The presence of contaminates does not necessarily indicate that the water poses a health risk.**

Some people are more vulnerable to contaminates than the general population. Immuno-compromised persons, such as persons with cancer undergoing chemo-therapy, persons who have organ transplants, people with HIV/AIDS or other immune system disorders, some elderly and infants can be particularly at risk from infections. These people should seek the advice of their health care provider about drinking water. EPA/CDC guidelines on appropriate means to lessen the risk and more information about contaminates and their potential health effects can be obtained by calling the Environmental Protection Agency's Safe Drinking Water Hotline at 1-800-426-4791.

WATER QUALITY DATA

During 2007, 12 routine bacteriological samples tested taken from various points throughout the system in accordance with our Coliform Monitoring Plan. We also

tested all the wells for nitrates and the distribution system for lead, copper, and disinfection by-products. All examinations of water from the wells and from the distribution system taken in 2007 met Department of Health Drinking Water Standards with the exception of arsenic in well #2. Arsenic treatment was installed on this well to reduce arsenic concentrations in the drinking water. The water system collected samples for the disinfection by-products trihalomethane (TTHM) and haloacetic acid (HAA5) during the warmest months of 2007.

ARSENIC

As many of you should know by now, well #2 exceeds the maximum contaminate level (MCL) allowed for arsenic. Mason County installed an arsenic removal system and monitoring indicates that we now meet the EPA's standard for arsenic. The EPA's standard balances the current understanding of arsenic's possible health effects against the costs of removing arsenic from drinking water. EPA continues to research the health effects of low levels of arsenic. Some people who drink water containing arsenic in excess of the MCL over many years could experience skin damage or problems with their circulatory system, and may have an increased risk of getting cancer.

EMERGENCY PREPAREDNESS

One thing that became obvious during last winter's storms is that the general public needs to take responsibility to be prepared in the event of a major disaster. Mason County Emergency Management staff is ready to help you become better prepared. Please call Sandi Kavarnstrom at 360-427-9670 ext. 328 for more information.

WATER CONSERVATION

We all know how important drinking water is. This is especially evident during interruptions of service that occurs due to maintenance or repair of the system. While these interruptions are only a minor inconvenience remember they are minor only because we know service will resume and most uses of drinking water can be delayed for short periods.

Should service be interrupted for an extensive period having to obtain an alternate source of water could easily become the most important function of your day. The water we can consume is only a small percentage of what is available and we must conserve and protect this our most precious resource.

Water meters are being mandated by the State to help control the inefficient use of the water we use and help the utility know how much water is lost through leaks in the system. It is also become apparent that some residents are leaving their water on in the winter to prevent freezing. This practice is not only a burden on the water system but the sewer plant must treat this water as well adding to our cost of operations. Meters will help to identify and curtail this practice.

SUBSTANCE	EPA'S MCL	HIGHEST LEVEL DETECTED	CONTAMINA' SOURCE
Arsenic	0.01 mg/L	0.0mg/L	Natural Deposit
Radium 228	N/A	Non-detect	Natural Deposit
Nitrate	10 mg/L	< 1.0 mg/L	Natural Deposits
HAA5	15 mg/L	80 mg/L	Disinfection by-product

Mg/L = parts per million Ug/L = parts per billion

Washington State Department of
Health
Division of Environmental Health
Office of Drinking Water

CONSUMER CONFIDENCE REPORT CERTIFICATION FORM

For Calendar Year 2005 Reports due before July 1, 2006
This certification form is due before October 1, 2006

Please note: Although the report and certification are not required to be sent to the state by the same date, if Drinking Water Regional Office Staff receive the certification at the same time as the report (by July 1, 2006), we will be better able to identify your report and properly credit your system.

1. Please complete and attach this certification to your Consumer Confidence Report. Send both to the regional office for your county (addresses on back) **before July 1, 2006.** File a copy for your records.

2. Mail or deliver your report and certification with enough advance time for the report to be received in the regional office **before July 1, 2006,** in order to be credited for compliance purposes. Copies of reports received after July 1 will not be considered on time, even if postmarked July 1. Copies of certifications received after October 1 will not be considered on time, even if postmarked October 1.

CERTIFICATION FOR:

Water System Name Hartstene Point

Water System ID Number 315690

Water System County Mason

I confirm that this Consumer Confidence Report has been distributed in accordance with the Consumer Confidence Report State Requirement (Subpart B of part 7 of chapter 246-290 WAC) and that the information contained in the report is correct and consistent with the compliance monitoring data previously submitted to the Washington State Department of Health Office of Drinking Water.

CERTIFIED BY:

Signature [signature]

Printed Name Tom Moore

Phone 360-427-7771

Date

Form #331-203

HARTSTENE POINTE ID #31569 0
WATER SYSTEM CONSUMER CONFIDENCE REPORT 2005

June 2006

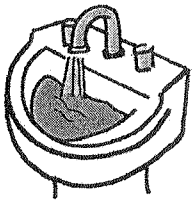

WATER SYSTEM MANAGER'S STATEMENT

The Consumer Confidence Rule is a federal requirement created by Congress and the Environmental Protection Agency. As a result the Mason County Department of Utilities and Waste Management is required to provide customers of the Hartstene Pointe Water System with this report. Herein we will provide you with information on the results of our compliance and water quality testing, the health effects of any contaminates found during this monitoring, and who to call in case of emergencies, loss of water service, water leaks, and billing questions. We are reporting results from the monitoring performed during 2005 calendar year.

ABOUT THE SYSTEM

The Mason County Department of Utilities and Waste Management employs four full time operators certified by the State of Washington to operate and maintain the water and wastewater systems the County owns, one of which is Hartstene Pointe. There is a certified operator on duty every day of the week to monitor our systems. Hartstene Pointe gets its water from two wells located on opposite ends of the Community Clubhouse. Well #1 is located near the mailroom and Well #2 near the tennis courts. Both wells are filtered to remove or reduce naturally occurring contaminates. There is an eighty thousand-gallon water storage tank (standpipe) at the end of the RV storage area off Nantucket.

CROSS-CONNECTION CONTROL PROGRAM

If you have an automated sprinkler system, a direct method of filling a swimming pool or spa, or any other apparatus, fixture, existing backflow device, or other condition that may cause contaminates to backflow into the water system, you may be affected. Please contact Tom Moore at 360-427-9670 ext. 771.

WHO DO I CALL WITH A PROBLEM?

To report a problem with your water service, billing statement or to report suspected leaks during regular office hours (8:00 AM to 5:00 PM Mon-Fri) call 360-427-9670 ext. 283. After hours emergency please call 911. For technical information or water saving tips call Tom Moore at extension 771

ARE THERE CONTAMINATES IN MY WATER?

Drinking water including bottled water, may reasonably be expected to contain at least some small amounts of minerals, organics, or chemicals, called contaminates. **The presence of contaminates does not necessarily indicate that the water poses a health risk.**

Some people are more vulnerable to contaminates than the general population. Immuno-compromised persons, such as persons with cancer undergoing chemo-therapy, persons who have organ transplants, people with HIV/AIDS or other immune system disorders, some elderly and infants can be particularly at risk from infections. These people should seek the advice of their health care provider about drinking water. EPA/CDC guidelines on appropriate means to lessen the risk and more information about contaminates and their potential health

minerals, organics, or chemicals, called contaminates. **The presence of contaminates does not necessarily indicate that the water poses a health risk.**
Some people are more vulnerable to contaminates than the general population. Immuno-compromised persons, such as persons with cancer undergoing chemo-therapy, persons who have organ transplants, people with HIV/AIDS or other immune system disorders, some elderly and infants can be particularly at risk from infections. These people should seek the advice of their health care provider about drinking water. EPA/CDC guidelines on appropriate means to lessen the risk and more information about contaminates and their potential health effects can be obtained by calling the Environmental Protection Agency's Safe Drinking Water Hotline at 1-800-426-4791.

WATER QUALITY DATA

During 2005, 24 routine bacteriological samples tested taken from various points throughout the system in accordance with our Coliform Monitoring Plan. We also tested all the wells for nitrates, lead, copper, radium 228, as well as Gross Alpha radionuclides. The County tested for numerous volatile organic and inorganic chemicals, 93 examinations total, required for the well 5 approval. All examinations of water from the wells and from the distribution system taken in 2005 met or exceeded Department of Health and EPA drinking water standards.

While your drinking water meets EPA's standard for arsenic, it does contain low levels of arsenic. EPA's standard balances the current understanding of arsenic's possible health effects against the costs of removing arsenic from drinking water. EPA continues to research the health effects of low levels of arsenic which is a mineral known to cause cancer in humans at high concentrations and is linked to other health effects such as skin damage and circulatory problems

EMERGENCY PREPAREDNESS

It became evident in the aftermath of the Katrina disaster that the general public needs to take responsibility to be better prepared in the event of a major disaster. Response by the Government may take days or weeks. Mason County's Emergency Management staff is ready to help you become better prepared. Please call Sandi Kvarnstrom at 360-275-4467 ext. 328 for information. The Beards Cove Water System has auxiliary power supplies and a seismically stable storage tank but everything underground could be at risk during a major earthquake. If you lose water service it could take days or even weeks to restore depending on the damage. Please be prepared, storing a two-week supply of drinking water is not unreasonable. We will do our best to return the system to service as soon as possible.

A WORD ON CONSERVATION

We all know how important drinking water is. This is especially evident during interruptions of service that occurs due to maintenance or repair of the system. While these interruptions are only a minor inconvenience remember they are minor only because we know service will resume and most uses of drinking water can be delayed for short periods.
Should service be interrupted for an extensive period having to obtain an alternate source of water could easily become the most important function of your day.
We are blessed to live in a part of the world where clean water seams plentiful. However this can be a double-edged sword in some cases. People sometimes fail to see the importance of the little things they can do to conserve. Of all the water in the world 97% is salt water. Of the remaining 3%, 2% is frozen leaving only 1% for consumption. Therefore don't be fooled by the apparent abundance of water in our environment. The water we can consume is only a small percentage of what is available and we must conserve and protect this our most precious resource.
Normally our wells operate about 4 to 6 hours per day. During hot weather we see the hours increase to as much as 16 to 20 hours per day. That is an increase from an average of about 200 gallons per household per day to around 600gallons. When this happens, **water use restrictions** are placed on the system to minimize the impacts of the increased demands. When you see the signs posted please reduce your lawn watering and car washing and follow an odd /even watering schedule based on the last digit of your street address. Call us for more information and to get some great water saving tips.

Substance	EPA's MCL/Action level	Highest level Detected	Contaminate source
Nitrate	10	<1	Natural Deposits
Radium 228	N/A	Non-detect	Natural Deposits
Copper	1.3 mg/L	0.04	Fixtures, pipes and Natural deposits
Lead	0.015 mg/L	0.002	

Health
Division of Environmental Health
Office of Drinking Water

Water Quality Monitoring Report for the Year 2006

System: HARTSTENE POINTE PWSID: 31569 0 Report Date: 03/21/2006
Contact: THOMAS V. MOORE Group: A - Comm County: MASON Region: SOUTHWEST

Part 1: List of Active Sources with Water Quality Monitoring Requirements

DOH Source#	Name	Type	Use	Susceptibility Rating	Treated?
S01	WELL #1 AHB601	Well	Permanent	High	Y
S02	WELL #2 AHB690	Well	Permanent	Moderate	Y

Part 2: Sampling Schedule for the Year 2006

Coliform Sampling (Routine)	Jan	Feb	Mar	Apr	May	June	July	Aug	Sept	Oct	Nov	Dec
	1	1	1	1	1	1	1	1	1	1	1	1

* Indicates the requirement is an exception from WAC 246-290.

- If the coliform (bacteriological) sampling schedule listed at the bottom of the current Water Facilities Inventory (WFI) form for your system is different from the schedule listed above, follow the schedule on the current WFI.
- Samples must be collected from representative points within the distribution system.
- Repeat samples are required following an unsatisfactory sample.
- A minimum of 5 routine samples are required the month following one or more unsatisfactory samples in accordance with your system's Coliform Monitoring Plan.

Lead and Copper Distribution Sampling

- Lead and copper samples must be collected from indoor faucets within the distribution system after the water has sat unused in the pipes for at least 6 hours but no more than 12 hours.
- Sample faucets should be flushed with cold water the evening prior to collecting the sample.
- Part 2 indicates the month in which samples should be collected. Part 4 indicates the total number of samples required.
- If your initial sample results in 2004 averaged 20 µg/L or less for TTHM and 15 µg/L or less for HAA5 and all of the samples were taken during the month of warmest water temperature, your next TTHM and HAA5 samples are due in 2007. If your initial sample results in 2004 were above these levels, but your sample results for 2004 and 2005 averaged 40 µg/L or less for TTHM and 30 µg/L or less for HAA5 and all of the samples were taken during the month of warmest water temperature, your next TTHM and HAA5 samples are due in 2008. Otherwise, another set of samples is due this year and must be collected during the month of warmest water temperature. If any of your TTHM or HAA5 compliance samples were not collected during the month of warmest water temperature, even if your TTHM and HAA5 results meet the above criteria, another set of samples is due this year.

Chemical Sampling Requirements

- Source water chemical samples must be taken from a location as near to the source as possible, after any treatment.
- Nitrate and nitrite are included as part of a complete IOC.

Month	Source	Monitoring Group	Test Method
January		*No source chemical sampling required this month*	
February		*No source chemical sampling required this month*	

Washington State Department of Health
Division of Environmental Health
Office of Drinking Water

Water Quality Monitoring Report for the Year 2006

Monitoring Group	(Test Method)	Sample Location	Schedule/Status
Lead/Copper *	LCR	Distribution	LCR 1 Set of 5 samples between Jan 2005 - Dec 2007
Nitrate *	NIT	S01	1 sample(s) every 1 year
Nitrate *	NIT	S02	1 sample(s) every 1 year
General Pesticides	SOC - 525.2	S01	Waiver granted - No sampling required
General Pesticides	SOC - 525.2	S02	Waiver granted - No sampling required
Diquat	SOC - 549.1	All sources	State Waiver Thru Dec 2007
Radium 228	RAD 228	S01	2 sample(s) every 3 years
Radium 228	RAD 228	S02	2 sample(s) every 3 years
Volatile Organic Contaminants	VOC - 524.2	S01	1 sample(s) every 3 years
Volatile Organic Contaminants	VOC - 524.2	S02	1 sample(s) every 3 years

** These contaminant monitoring groups do not have waiver options under the SDWA.*
*** Your IOC waiver also requires that you sample more frequently for some analytes. You are required to collect a sample for these analytes ONLY when they are scheduled in Part 2.*

Part 5: Regional Water Quality Monitoring Contact

Southwest Regional Office
Phone: (360) 586-5179

For Further information call the Southwest Regional Office (Belle Fuchs / Donna Freier)

For questions regarding Disinfection ByProducts (DBP) monitoring, contact: Regina Grimm (360) 586-4679

Special Note

For Group A Community Systems Only: Your Consumer Confidence Report, summarizing the results of your 2005 water quality monitoring requirements is due before July 1, 2006. For further information visit www.doh.wa.gov/ehp/dw/Our_Main_Pages/consumer.htm or contact the CCR Coordinator at your Regional Office.

Please Print Plainly
USE HEAVY PEN

Before Treatment

WATER MANAGEMENT LABORATORIES INC.

1515 80th St. E
Tacoma, WA
(253) 531-3121

SEE BACK FOR INSTRUCTIONS

INORGANIC CHEMICALS (IOCS) REPORT

System ID No: 315490	System Name: Hansons Point	
Lab/Sample No: 0891627	Date Collected: 10-24-07	DOH Source No: 2
Multiple Source Nos: N/A	Sample Type:	Sample Purpose: I
Date Received: 10-25-07	Date Reported: 10-26-07	Supervisor: LJM
County: Mason	Date Digested: NA	Group: A B Other
Sample Location: NW #2		
Send Results & Bill To: Mason County Health		Remarks:
PO Box 578		
Shelton WA 98584		

DOH#	ANALYTES	RESULTS	UNITS	SRL	TRIGGER	MCL	EXCEEDS Trigger?	EXCEEDS MCL?	Method/Analyst	
	EPA REGULATED									
4	Arsenic	0.043	mg/l	0.002	0.05	0.05	yes	yes	3113B	JMG
5	Barium	NA	mg/l	0.1	2	2			3113B	
6	Cadmium		mg/l	0.002	0.005	0.005			3113B	
7	Chromium		mg/l	0.01	0.1	0.1			3113B	
11	Mercury		mg/l	0.0005	0.002	0.002			3112B	
12	Selenium		mg/l	0.005	0.05	0.05			3113B	
110	Beryllium		mg/l	0.003	0.004	0.004			3113B	
111	Nickel		mg/l	0.04	0.1	0.1			3111B	
112	Antimony		mg/l	0.005	0.006	0.006			3113B	
113	Thallium		mg/l	0.002	0.002	0.002			200.9	
116	Cyanide		mg/l	0.05	0.2	0.2			4500-CNF	
19	Fluoride		mg/l	0.2	2	4			4110B	
114	Nitrite - N		mg/l	0.5	0.5	1			4110B	
20	Nitrate - N		mg/l	0.5	5	10			4110B	
161	Total Nitrate/Nitrite		mg/l	0.5	5	10			4110B	
	EPA REGULATED (Secondary)									
8	Iron	NA	mg/l	0.1	0.3	0.3			3111B	
10	Manganese		mg/l	0.01	0.05	0.05			3111B	
13	Silver		mg/l	0.01	0.1	0.1			3111B	
21	Chloride		mg/l	20	250	250			4110B	
22	Sulfate		mg/l	10	250	250			4110B	
24	Zinc		mg/l	0.2	5	5			3111B	
	STATE REGULATED									
14	Sodium	NA	mg/l	5					3111B	
15	Hardness		mg/l	10					2340C	
16	Conductivity		umhos/cm	10	700	700			2510B	
17	Turbidity		NTU	0.1	1				2130B	
18	Color		color units	5	15	15			2120B	
26	Total Dissolved Solids		mg/l	150	500	500			2540C	
	STATE UNREGULATED									
9	Lead	NA	mg/l	0.002					3113B	
23	Copper		mg/l	0.02					3111B	

COMMENTS: missing

LAB USE ONLY: BAC ( ) VOC ( ) SOC ( ) MISC ( )

1986 © PROPERTY OF WATER MANAGEMENT LABORATORIES, INC.

Revised 2003

USE HEAVY PEN

MANAGEMENT LABORATORIES INC.
Tacoma, WA 98404
(253) 531-3121

INORGANIC CHEMICALS (IOCS) REPORT

System ID No: 315690	System Name: Harstene Point	
Lab/Sample No: 08711147	Date Collected: 07-19-06	DOH Source No: 301
Multiple Source Nos: N/A	Sample Type: B	Sample Purpose: C
Date Received: 07-20-06	Date Reported: 08-01-06	Supervisor: LMA
County: Mason	Date Digested: NA	Group: (A) B Other
Sample Location: Well 1		
Send Results & Bill To: Mason County Utilities PO Box 578 Shelton WA 98584		Remarks:

DOH#	ANALYTES	RESULTS	UNITS	SRL	TRIGGER	MCL	EXCEEDS Trigger?	EXCEEDS MCL?	Method/Analyst	
	EPA REGULATED									
4	Arsenic	0.010	mg/l	0.002	0.05	0.05	NO	NO	3113B	DMS
5	Barium	<0.1	mg/l	0.1	2	2			3113B	DMS
6	Cadmium	<0.002	mg/l	0.002	0.005	0.005			3113B	DMS
7	Chromium	<0.01	mg/l	0.01	0.1	0.1			3113B	DMS
11	Mercury	<0.0005	mg/l	0.0005	0.002	0.002			3112B	
12	Selenium	<0.005	mg/l	0.005	0.05	0.05			3113B	DMS
110	Beryllium	<0.003	mg/l	0.003	0.004	0.004			3113B	DMS
111	Nickel	<0.04	mg/l	0.04	0.1	0.1			3111B	DMS
112	Antimony	<0.005	mg/l	0.005	0.006	0.006			3113B	DMS
113	Thallium	<0.002	mg/l	0.002	0.002	0.002			200.9	DMS
116	Cyanide	<0.05	mg/l	0.05	0.2	0.2			4500-CNF	LHL
19	Fluoride	0.2	mg/l	0.2	2	4			4110B	LHL
114	Nitrite - N	<0.2	mg/l	0.5	0.5	1			4110B	LHL
20	Nitrate - N	<0.2	mg/l	0.5	5	10			4110B	LHL
161	Total Nitrate/Nitrite	<0.4	mg/l	0.5	5	10			4110B	LHL
	EPA REGULATED (Secondary)									
8	Iron	0.34	mg/l	0.1	0.3	0.3	YES	YES	3111B	LMA
10	Manganese	0.25	mg/l	0.01	0.05	0.05			3111B	DMS
13	Silver	<0.01	mg/l	0.01	0.1	0.1	NO	NO	3111B	DMS
21	Chloride	2	mg/l	20	250	250			4110B	LHL
22	Sulfate	<1	mg/l	10	250	250			4110B	LHL
24	Zinc	<0.2	mg/l	0.2	5	5			3111B	DMS
	STATE REGULATED									
14	Sodium	10	mg/l	5					3111B	DMS
15	Hardness	96	mg/l	10					2340C	
16	Conductivity	175	umhos/cm	10	700	700			2510B	
17	Turbidity	0.9	NTU	0.1	1				2130B	
18	Color	10	color units	5	15	15			2120B	
26	Total Dissolved Solids	NA	mg/l	150	500	500			2540C	
	STATE UNREGULATED									
9	Lead	<0.002	mg/l	0.002					3113B	DMS
23	Copper	<0.02	mg/l	0.02					3111B	DMS

COMMENTS: FC 28

LAB USE ONLY: BAC ( ) VOC (✓) SOC ( ) MISC ( )

1986 © PROPERTY OF WATER MANAGEMENT LABORATORIES, INC.

Revised 2003

-Latest Treated result.

Please Print Plainly
USE HEAVY PEN
DO NOT WRITE IN SHADED AREAS

WATER MANAGEMENT LABORATORIES INC.
1515 80th St. E.
Tacoma, WA 98404
(253) 531-3121

SEE BACK FOR INSTRUCTIONS

INORGANIC CHEMICALS (IOCS) REPORT

System ID No: 315690 | System Name: Harstene Point
Lab/Sample No: 08922656 | Date Collected: 06-11-08 | DOH Source No: S02
Multiple Source Nos: N/A | Sample Type: A | Sample Purpose: C
Date Received: 06-12-08 | Date Reported: 06-17-08 | Supervisor: OMB
County: Mason | Date Digested: NA | Group: (A) B Other
Sample Location: Filterroom
Send Results & Bill To: Mason County Utilities
PO Box 578
Shelton, WA 98584
Remarks:

DOH#	ANALYTES	RESULTS	UNITS	SRL	TRIGGER	MCL	EXCEEDS Trigger?	EXCEEDS MCL?	Method / Analyst	
	EPA REGULATED									
4	Arsenic	0.004	mg/L	0.002	0.01	0.01	NO	NO	200.8	OMB
5	Barium	NA	mg/L	0.1	2	2			200.8	
6	Cadmium		mg/L	0.002	0.005	0.005			200.8	
7	Chromium		mg/L	0.01	0.1	0.1			200.8	
11	Mercury		mg/L	0.0005	0.002	0.002			200.8	
12	Selenium		mg/L	0.005	0.05	0.05			200.8	
110	Beryllium		mg/L	0.003	0.004	0.004			200.8	
111	Nickel		mg/L	0.04	0.1	0.1			200.8	
112	Antimony		mg/L	0.005	0.006	0.006			200.8	
113	Thallium		mg/L	0.002	0.002	0.002			200.9	
116	Cyanide		mg/L	0.05	0.2	0.2			4500-CNF	
19	Fluoride		mg/L	0.2	2	4			300.0	
114	Nitrite - N		mg/L	0.5	0.5	1			300.0	
20	Nitrate - N		mg/L	0.5	5	10			300.0	
161	Total Nitrate/Nitrite		mg/L	0.5	5	10			300.0	
	EPA REGULATED (Secondary)									
8	Iron	NA	mg/L	0.1	0.3	0.3			3111B	
10	Manganese		mg/L	0.01	0.05	0.05			200.8	
13	Silver		mg/L	0.01	0.1	0.1			200.8	
21	Chloride		mg/L	20	250	250			300.0	
22	Sulfate		mg/L	10	250	250			300.0	
24	Zinc		mg/L	0.2	5	5			200.8	
	STATE REGULATED									
14	Sodium	NA	mg/L	5					200.8	
15	Hardness		mg/L	10					2340C	
16	Conductivity		umhos/cm	10	700	700			2510B	
17	Turbidity		NTU	0.1	1				2130B	
18	Color		color units	5	15	15			2120B	
26	Total Dissolved Solids		mg/L	150	500	500			2540C	
	STATE UNREGULATED									
9	Lead	NA	mg/L	0.002					200.8	
23	Copper		mg/L	0.02					200.8	

COMMENTS: Arsenic

S02 = WELL 2

2008 * PROPERTY OF WATER MANAGEMENT LABORATORIES, INC.

WATER MANAGEMENT LABORATORIES INC.

1515 80th St. E.
Tacoma, WA 98404
(253) 531-3121

DRINKING WATER VOLATILE ORGANIC CHEMICALS (VOC's) ANALYSIS REPORT
EPA TEST METHOD - 524.2/TTHMs

System ID No. :	315690		DOH Source No* :	592	Lab Sample No : 08971160
System Name :	HARSTENE POINTE				Group : (A) B Private
Multiple Source Nos. :	N/A		Date Collected :	09-13-04	Date Received : 09-14-04
Sample Type :	A	Purpose : C	Date Analyzed :	09-15-04	Analyst : LHL
County:	MASON		Date Reported :	09-17-04	Supervisor : WMR
Specific Sample Location :	SEE BELOW				
Send Report To :	Mason County Utilities / Attn: Tom Moore				
Bill To :	P.O. BOX 578 ; Shelton, WA 98584				

* Generally a 92 for Distribution Sample

DOH #	27	28	29	30	31	32
SRL	0.5 µg/L	0.5 µg/L	0.5 µg/L	0.5 µg/L	0.5 µg/L	0.5 µg/L
MCL	-	-	-	-	80 µg/L	80 µg/L

All results are in micrograms per Liter (ppB)

Lab Sample No:	Collect Date	Analysis Date	Site / Location	Chloroform	Bromo dichloro methane	Chloro dibromo methane	Bromoform	Total THMs	Maximum TTHM Potential
08971160	09-13-04	09-15-04	Treatment Plant	1.0	ND	ND	ND	1.0	—

NOTES:

SRL (State Reporting Level): Indicates the minimum reporting level required by the Washington Department of Health (DOH).

MCL (Maximum Contaminant Level): If the contaminant amount exceeds the MCL, immediately contact your regional DOH office.

NA (Not Analyzed): In the RESULTS column indicates this compound was not included in the current analysis.

ND (Not Detected): In the RESULTS column indicates this compound was analyzed and not detected at a level greater than or equal to the SRL.

< : Indicates less than.

Comments :

WATER MANAGEMENT LABORATORIES INC.

1515 80th St. E.
Tacoma, WA 98404
(253) 531-3121

VOLATILE ORGANIC CHEMICALS (VOC's) ANALYSIS REPORT
EPA TEST METHOD - 524.2

System ID No.: 315690	System Name: Harstene Pointe	
Lab/Sample No.: 08970035	Date Collected: 12/01/03	DOH Source No.: S01
Multiple Source Nos.: N/A	Sample Type: A	Sample Purpose: C
Date Received: 12/02/03	Date Reported: 12/03/03	Supervisor:
	Date Analyzed: 12/02/03	Analyst: LHL
County: Mason	Group: A	
Sample Location: #1 Filter Room		
Send To: Mason County Utilities & Waste Management/ Attn: Tom Moore P.O.Box 578; Shelton, WA 98584	Remarks:	

S01 = Well 1

DOH #	ANALYTES	RESULTS	UNITS	SRL	TRIGGER	MCL	EXCEEDS	
	EPA REGULATED						Trigger?	MCL?
45	Vinyl Chloride	ND	ug/L	0.5	0.5	2	NO	NO
46	1,1 - Dichloroethylene	ND	ug/L	0.5	0.5	7	NO	NO
47	1,1,1 - Trichloroethane	ND	ug/L	0.5	0.5	200	NO	NO
48	Carbon Tetrachloride	ND	ug/L	0.5	0.5	5	NO	NO
49	Benzene	ND	ug/L	0.5	0.5	5	NO	NO
50	1,2 - Dichloroethane	ND	ug/L	0.5	0.5	5	NO	NO
51	Trichloroethylene	ND	ug/L	0.5	0.5	5	NO	NO
52	1,4 - Dichlorobenzene	ND	ug/L	0.5	0.5	75	NO	NO
56	Dichloromethane	ND	ug/L	0.5	0.5	5	NO	NO
57	trans-1,2 - Dichloroethylene	ND	ug/L	0.5	0.5	100	NO	NO
60	cis-1,2 - Dichloroethylene	ND	ug/L	0.5	0.5	70	NO	NO
63	1,2 - Dichloropropane	ND	ug/L	0.5	0.5	5	NO	NO
66	Toluene	ND	ug/L	0.5	0.5	1000	NO	NO
67	1,1,2 - Trichloroethane	ND	ug/L	0.5	0.5	5	NO	NO
68	Tetrachloroethylene	ND	ug/L	0.5	0.5	5	NO	NO
71	Chlorobenzene	ND	ug/L	0.5	0.5	100	NO	NO
73	Ethylbenzene	ND	ug/L	0.5	0.5	700	NO	NO
76	Styrene	ND	ug/L	0.5	0.5	100	NO	NO
84	1,2 - Dichlorobenzene	ND	ug/L	0.5	0.5	600	NO	NO
95	1,2,4 - Trichlorobenzene	ND	ug/L	0.5	0.5	70	NO	NO
160	Total Xylenes	ND	ug/L	0.5	0.5	10000	NO	NO
74	m/p Xylenes (MCL for Total)	ND	ug/L	0.5	0.5		NO	
75	o - Xylene (MCL for Total)	ND	ug/L	0.5	0.5		NO	
	EPA UNREGULATED							
27	Chloroform	13.7	ug/L	0.5	0.5		Yes	
28	Bromodichloromethane	1.1	ug/L	0.5	0.5		Yes	
29	Chlorodibromomethane	ND	ug/L	0.5	0.5		NO	
30	Bromoform	ND	ug/L	0.5	0.5		NO	
53	Chloromethane	ND	ug/L	0.5	0.5		NO	
54	Bromomethane	ND	ug/L	0.5	0.5		NO	
55	Chloroethane	ND	ug/L	0.5	0.5		NO	

Water Management Laboratories, Inc.
1515 80th St. E.
Tacoma, WA 98404
(253) 531-3121

DOH #	ANALYTES	RESULTS	UNITS	SRL	TRIGGER	MCL	EXCEEDS	
EPA UNREGULATED (Continued)							Trigger?	MCL?
58	1,1 - Dichloroethane	ND	ug/L	0.5	0.5		NO	
59	2,2 - Dichloropropane	ND	ug/L	0.5	0.5		NO	
62	1,1 - Dichloropropene	ND	ug/L	0.5	0.5		NO	
64	Dibromomethane	ND	ug/L	0.5	0.5		NO	
70	1,3 - Dichloropropane	ND	ug/L	0.5	0.5		NO	
72	1,1,1,2 - Tetrachlroroethane	ND	ug/L	0.5	0.5		NO	
78	Bromobenzene	ND	ug/L	0.5	0.5		NO	
79	1,2,3 - Trichloropropane	ND	ug/L	0.5	0.5		NO	
80	1,1,2,2 - Tetrachloroethane	ND	ug/L	0.5	0.5		NO	
81	o - Chlorotoluene	ND	ug/L	0.5	0.5		NO	
82	p - Chlorotoluene	ND	ug/L	0.5	0.5		NO	
83	m - Dichlorobenzene	ND	ug/L	0.5	0.5		NO	
154	1,3 - Dichloropropene	ND	ug/L	0.5	0.5		NO	
STATE UNREGULATED								
65	cis-1,3 - Dichloropropene	ND	ug/L	0.5	0.5		NO	
69	trans-1,3 - Dichloropropene	ND	ug/L	0.5	0.5		NO	
85	Fluorotrichloromethane	ND	ug/L	0.5	0.5		NO	
86	Bromochloromethane	ND	ug/L	0.5	0.5		NO	
87	Isopropylbenzene	ND	ug/L	0.5	0.5		NO	
88	n - Propylbenzene	ND	ug/L	0.5	0.5		NO	
89	1,3,5 - Trimethylbenzene	ND	ug/L	0.5	0.5		NO	
90	t - Butylbenzene	ND	ug/L	0.5	0.5		NO	
91	1,2,4 - Trimethylbenzene	ND	ug/L	0.5	0.5		NO	
92	s - Butylbenzene	ND	ug/L	0.5	0.5		NO	
93	p - Isopropyltoluene	ND	ug/L	0.5	0.5		NO	
94	n - Butylbenzene	ND	ug/L	0.5	0.5		NO	
96	Napthalene	ND	ug/L	0.5	0.5		NO	
97	Hexachlorobutadiene	ND	ug/L	0.5	0.5		NO	
98	1,2,3 - Trichlorobenzene	ND	ug/L	0.5	0.5		NO	
102	EDB (Confirm by 504.1)	ND	ug/L	0.5	0.5		NO	
103	DBCP (Confirm by 504.1)	ND	ug/L	0.5	0.5		NO	
162	Dichlorodifluoromethane	ND	ug/L	0.5	0.5		NO	
N/A	Nitrobenzene	ND	ug/L					
N/A	MTBE	ND	ug/L	0.5	0.5		NO	

NOTES:

SRL (State Reporting Level): Indicates the minimum reporting level required by the Washington Department of Health (DOH).

Trigger Level: DOH Drinking Water response level. Systems with compounds detected at concentrations in excess of this level are required to take additional samples. Contact your regional DOH office for further information.

MCL (Maximum Contaminant Level): If the contaminant amount exceeds the MCL, immediately contact your regional DOH office.

NA (Not Analyzed): In the RESULTS column indicates this compound was not included in the current analysis.

ND (Not Detected): In the RESULTS column indicates this compound was analyzed and not detected at a level greater than or equal to the SRL.

< : Indicates less than.

Comments :

A maximum contaminant level of 80 ug/L total Trihalomethanes (Compounds 27-30) is allowed.

Method 524: VOC's

WATER MANAGEMENT LABORATORIES INC.

1515 80th St. E.
Tacoma, WA 98404
(253) 531-3121

VOLATILE ORGANIC CHEMICALS (VOC's) ANALYSIS REPORT
EPA TEST METHOD - 524.2

System ID No.: 315690	System Name: Harstene Pointe	
Lab/Sample No.: 08970033	Date Collected: 12/01/03	DOH Source No.: S02
Multiple Source Nos.: N/A	Sample Type: A	Sample Purpose: C
Date Received: 12/02/03	Date Reported: 12/03/03	Supervisor: WMA
	Date Analyzed: 12/02/03	Analyst: LHL
County: Mason	Group: A	
Sample Location: #2 Filter Room		
Send To: Mason County Utilities & Waste Management / Attn: Tom Moore P.O.Box 578; Shelton, WA 98584	Remarks:	

S02 = Well 2

DOH #	ANALYTES	RESULTS	UNITS	SRL	TRIGGER	MCL	EXCEEDS	
		EPA REGULATED					Trigger?	MCL?
45	Vinyl Chloride	ND	ug/L	0.5	0.5	2	NO	NO
46	1,1 - Dichloroethylene	ND	ug/L	0.5	0.5	7	NO	NO
47	1,1,1 - Trichloroethane	ND	ug/L	0.5	0.5	200	NO	NO
48	Carbon Tetrachloride	ND	ug/L	0.5	0.5	5	NO	NO
49	Benzene	ND	ug/L	0.5	0.5	5	NO	NO
50	1,2 - Dichloroethane	ND	ug/L	0.5	0.5	5	NO	NO
51	Trichloroethylene	ND	ug/L	0.5	0.5	5	NO	NO
52	1,4 - Dichlorobenzene	ND	ug/L	0.5	0.5	75	NO	NO
56	Dichloromethane	ND	ug/L	0.5	0.5	5	NO	NO
57	trans-1,2 - Dichloroethylene	ND	ug/L	0.5	0.5	100	NO	NO
60	cis-1,2 - Dichloroethylene	ND	ug/L	0.5	0.5	70	NO	NO
63	1,2 - Dichloropropane	ND	ug/L	0.5	0.5	5	NO	NO
66	Toluene	ND	ug/L	0.5	0.5	1000	NO	NO
67	1,1,2 - Trichloroethane	ND	ug/L	0.5	0.5	5	NO	NO
68	Tetrachloroethylene	ND	ug/L	0.5	0.5	5	NO	NO
71	Chlorobenzene	ND	ug/L	0.5	0.5	100	NO	NO
73	Ethylbenzene	ND	ug/L	0.5	0.5	700	NO	NO
76	Styrene	ND	ug/L	0.5	0.5	100	NO	NO
84	1,2 - Dichlorobenzene	ND	ug/L	0.5	0.5	600	NO	NO
95	1,2,4 - Trichlorobenzene	ND	ug/L	0.5	0.5	70	NO	NO
160	Total Xylenes	ND	ug/L	0.5	0.5	10000	NO	NO
74	m/p Xylenes (MCL for Total)	ND	ug/L	0.5	0.5		NO	
75	o - Xylene (MCL for Total)	ND	ug/L	0.5	0.5		NO	
		EPA UNREGULATED						
27	Chloroform	3.1	ug/L	0.5	0.5		Yes	
28	Bromodichloromethane	ND	ug/L	0.5	0.5		NO	
29	Chlorodibromomethane	ND	ug/L	0.5	0.5		NO	
30	Bromoform	ND	ug/L	0.5	0.5		NO	
53	Chloromethane	ND	ug/L	0.5	0.5		NO	
54	Bromomethane	ND	ug/L	0.5	0.5		NO	
55	Chloroethane	ND	ug/L	0.5	0.5		NO	

Water Management Laboratories, Inc.
1515 80th St. E.
Tacoma, WA 98404
(253) 531-3121

DOH #	ANALYTES	RESULTS	UNITS	SRL	TRIGGER	MCL	EXCEEDS	
	EPA UNREGULATED (Continued)						Trigger?	MCL?
58	1,1 - Dichloroethane	ND	ug/L	0.5	0.5		NO	
59	2,2 - Dichloropropane	ND	ug/L	0.5	0.5		NO	
62	1,1 - Dichloropropene	ND	ug/L	0.5	0.5		NO	
64	Dibromomethane	ND	ug/L	0.5	0.5		NO	
70	1,3 - Dichloropropane	ND	ug/L	0.5	0.5		NO	
72	1,1,1,2 - Tetrachlroroethane	ND	ug/L	0.5	0.5		NO	
78	Bromobenzene	ND	ug/L	0.5	0.5		NO	
79	1,2,3 - Trichloropropane	ND	ug/L	0.5	0.5		NO	
80	1,1,2,2 - Tetrachloroethane	ND	ug/L	0.5	0.5		NO	
81	o - Chlorotoluene	ND	ug/L	0.5	0.5		NO	
82	p - Chlorotoluene	ND	ug/L	0.5	0.5		NO	
83	m - Dichlorobenzene	ND	ug/L	0.5	0.5		NO	
154	1,3 - Dichloropropene	ND	ug/L	0.5	0.5		NO	
	STATE UNREGULATED							
65	cis-1,3 - Dichloropropene	ND	ug/L	0.5	0.5		NO	
69	trans-1,3 - Dichloropropene	ND	ug/L	0.5	0.5		NO	
85	Fluorotrichloromethane	ND	ug/L	0.5	0.5		NO	
86	Bromochloromethane	ND	ug/L	0.5	0.5		NO	
87	Isopropylbenzene	ND	ug/L	0.5	0.5		NO	
88	n - Propylbenzene	ND	ug/L	0.5	0.5		NO	
89	1,3,5 - Trimethylbenzene	ND	ug/L	0.5	0.5		NO	
90	t - Butylbenzene	ND	ug/L	0.5	0.5		NO	
91	1,2,4 - Trimethylbenzene	ND	ug/L	0.5	0.5		NO	
92	s - Butylbenzene	ND	ug/L	0.5	0.5		NO	
93	p - Isopropyltoluene	ND	ug/L	0.5	0.5		NO	
94	n - Butylbenzene	ND	ug/L	0.5	0.5		NO	
96	Napthalene	ND	ug/L	0.5	0.5		NO	
97	Hexachlorobutadiene	ND	ug/L	0.5	0.5		NO	
98	1,2,3 - Trichlorobenzene	ND	ug/L	0.5	0.5		NO	
102	EDB (Confirm by 504.1)	ND	ug/L	0.5	0.5		NO	
103	DBCP (Confirm by 504.1)	ND	ug/L	0.5	0.5		NO	
162	Dichlorodifluoromethane	ND	ug/L	0.5	0.5		NO	
N/A	Nitrobenzene	ND	ug/L					
N/A	MTBE	ND	ug/L	0.5	0.5		NO	

NOTES:

SRL (State Reporting Level): Indicates the minimum reporting level required by the Washington Department of Health (DOH).

Trigger Level: DOH Drinking Water response level. Systems with compounds detected at concentrations in excess of this level are required to take additional samples. Contact your regional DOH office for further information.

MCL (Maximum Contaminant Level): If the contaminant amount exceeds the MCL, immediately contact your regional DOH office.

NA (Not Analyzed): In the RESULTS column indicates this compound was not included in the current analysis.

ND (Not Detected): In the RESULTS column indicates this compound was analyzed and not detected at a level greater than or equal to the SRL.

< : Indicates less than.

Comments :

A maximum contaminant level of 80 ug/L total Trihalomethanes (Compounds 27-30) is allowed.

Method 524: VOC's

WATER MANAGEMENT LABORATORIES INC.

1515 80th St. E.
Tacoma, WA 98404
(253) 531-3121

VOLATILE ORGANIC CHEMICALS (VOC's) ANALYSIS REPORT
EPA TEST METHOD - 524.2

System ID No.: 315690	System Name: Harstene Pointe	
Lab/Sample No.: 08970033	Date Collected: 12/01/03	DOH Source No.: S02
Multiple Source Nos.: N/A	Sample Type: A	Sample Purpose: C
Date Received: 12/02/03	Date Reported: 12/03/03	Supervisor: WMA
	Date Analyzed: 12/02/03	Analyst: LHL
County: Mason	Group: A	
Sample Location: #2 Filter Room		
Send To: Mason County Utilities & Waste Management / Attn: Tom Moore P.O.Box 578; Shelton, WA 98584	Remarks:	

S02 = Well 2

DOH #	ANALYTES	RESULTS	UNITS	SRL	TRIGGER	MCL	EXCEEDS	
		EPA REGULATED					Trigger?	MCL?
45	Vinyl Chloride	ND	ug/L	0.5	0.5	2	NO	NO
46	1,1 - Dichloroethylene	ND	ug/L	0.5	0.5	7	NO	NO
47	1,1,1 - Trichloroethane	ND	ug/L	0.5	0.5	200	NO	NO
48	Carbon Tetrachloride	ND	ug/L	0.5	0.5	5	NO	NO
49	Benzene	ND	ug/L	0.5	0.5	5	NO	NO
50	1,2 - Dichloroethane	ND	ug/L	0.5	0.5	5	NO	NO
51	Trichloroethylene	ND	ug/L	0.5	0.5	5	NO	NO
52	1,4 - Dichlorobenzene	ND	ug/L	0.5	0.5	75	NO	NO
56	Dichloromethane	ND	ug/L	0.5	0.5	5	NO	NO
57	trans-1,2 - Dichloroethylene	ND	ug/L	0.5	0.5	100	NO	NO
60	cis-1,2 - Dichloroethylene	ND	ug/L	0.5	0.5	70	NO	NO
63	1,2 - Dichloropropane	ND	ug/L	0.5	0.5	5	NO	NO
66	Toluene	ND	ug/L	0.5	0.5	1000	NO	NO
67	1,1,2 - Trichloroethane	ND	ug/L	0.5	0.5	5	NO	NO
68	Tetrachloroethylene	ND	ug/L	0.5	0.5	5	NO	NO
71	Chlorobenzene	ND	ug/L	0.5	0.5	100	NO	NO
73	Ethylbenzene	ND	ug/L	0.5	0.5	700	NO	NO
76	Styrene	ND	ug/L	0.5	0.5	100	NO	NO
84	1,2 - Dichlorobenzene	ND	ug/L	0.5	0.5	600	NO	NO
95	1,2,4 - Trichlorobenzene	ND	ug/L	0.5	0.5	70	NO	NO
160	Total Xylenes	ND	ug/L	0.5	0.5	10000	NO	NO
74	m/p Xylenes (MCL for Total)	ND	ug/L	0.5	0.5		NO	
75	o - Xylene (MCL for Total)	ND	ug/L	0.5	0.5		NO	
		EPA UNREGULATED						
27	Chloroform	3.1	ug/L	0.5	0.5		Yes	
28	Bromodichloromethane	ND	ug/L	0.5	0.5		NO	
29	Chlorodibromomethane	ND	ug/L	0.5	0.5		NO	
30	Bromoform	ND	ug/L	0.5	0.5		NO	
53	Chloromethane	ND	ug/L	0.5	0.5		NO	
54	Bromomethane	ND	ug/L	0.5	0.5		NO	
55	Chloroethane	ND	ug/L	0.5	0.5		NO	

Water Management Laboratories, Inc.
1515 80th St. E.
Tacoma, WA 98404
(253) 531-3121

DOH #	ANALYTES	RESULTS	UNITS	SRL	TRIGGER	MCL	EXCEEDS	
	EPA UNREGULATED (Continued)						Trigger?	MCL?
58	1,1 - Dichloroethane	ND	ug/L	0.5	0.5		NO	
59	2,2 - Dichloropropane	ND	ug/L	0.5	0.5		NO	
62	1,1 - Dichloropropene	ND	ug/L	0.5	0.5		NO	
64	Dibromomethane	ND	ug/L	0.5	0.5		NO	
70	1,3 - Dichloropropane	ND	ug/L	0.5	0.5		NO	
72	1,1,1,2 - Tetrachlroroethane	ND	ug/L	0.5	0.5		NO	
78	Bromobenzene	ND	ug/L	0.5	0.5		NO	
79	1,2,3 - Trichloropropane	ND	ug/L	0.5	0.5		NO	
80	1,1,2,2 - Tetrachloroethane	ND	ug/L	0.5	0.5		NO	
81	o - Chlorotoluene	ND	ug/L	0.5	0.5		NO	
82	p - Chlorotoluene	ND	ug/L	0.5	0.5		NO	
83	m - Dichlorobenzene	ND	ug/L	0.5	0.5		NO	
154	1,3 - Dichloropropene	ND	ug/L	0.5	0.5		NO	
	STATE UNREGULATED							
65	cis-1,3 - Dichloropropene	ND	ug/L	0.5	0.5		NO	
69	trans-1,3 - Dichloropropene	ND	ug/L	0.5	0.5		NO	
85	Fluorotrichloromethane	ND	ug/L	0.5	0.5		NO	
86	Bromochloromethane	ND	ug/L	0.5	0.5		NO	
87	Isopropylbenzene	ND	ug/L	0.5	0.5		NO	
88	n - Propylbenzene	ND	ug/L	0.5	0.5		NO	
89	1,3,5 - Trimethylbenzene	ND	ug/L	0.5	0.5		NO	
90	t - Butylbenzene	ND	ug/L	0.5	0.5		NO	
91	1,2,4 - Trimethylbenzene	ND	ug/L	0.5	0.5		NO	
92	s - Butylbenzene	ND	ug/L	0.5	0.5		NO	
93	p - Isopropyltoluene	ND	ug/L	0.5	0.5		NO	
94	n - Butylbenzene	ND	ug/L	0.5	0.5		NO	
96	Napthalene	ND	ug/L	0.5	0.5		NO	
97	Hexachlorobutadiene	ND	ug/L	0.5	0.5		NO	
98	1,2,3 - Trichlorobenzene	ND	ug/L	0.5	0.5		NO	
102	EDB (Confirm by 504.1)	ND	ug/L	0.5	0.5		NO	
103	DBCP (Confirm by 504.1)	ND	ug/L	0.5	0.5		NO	
162	Dichlorodifluoromethane	ND	ug/L	0.5	0.5		NO	
N/A	Nitrobenzene	ND	ug/L					
N/A	MTBE	ND	ug/L	0.5	0.5		NO	

NOTES:

SRL (State Reporting Level): Indicates the minimum reporting level required by the Washington Department of Health (DOH).

Trigger Level: DOH Drinking Water response level. Systems with compounds detected at concentrations in excess of this level are required to take additional samples. Contact your regional DOH office for further information.

MCL (Maximum Contaminant Level): If the contaminant amount exceeds the MCL, immediately contact your regional DOH office.

NA (Not Analyzed): In the RESULTS column indicates this compound was not included in the current analysis.

ND (Not Detected): In the RESULTS column indicates this compound was analyzed and not detected at a level greater than or equal to the SRL.

< : Indicates less than.

Comments :

A maximum contaminant level of 80 ug/L total Trihalomethanes (Compounds 27-30) is allowed.

Method 524: VOC's

WATER MANAGEMENT LABORATORIES INC.

1515 80th St. E.
Tacoma, WA 98404
(253) 531-3121

VOLATILE ORGANIC CHEMICALS (VOC's) ANALYSIS REPORT
EPA TEST METHOD - 524.2

System ID No.: 315690	System Name: Harstene Pointe	
Lab/Sample No.: 08970033	Date Collected: 12/01/03	DOH Source No.: S02
Multiple Source Nos.: N/A	Sample Type: A	Sample Purpose: C
Date Received: 12/02/03	Date Reported: 12/03/03	Supervisor: WMA
	Date Analyzed: 12/02/03	Analyst: LHL
County: Mason	Group: A	
Sample Location: #2 Filter Room		
Send To: Mason County Utilities & Waste Management / Attn: Tom Moore P.O.Box 578; Shelton, WA 98584	Remarks:	

S02 = Well 2

DOH #	ANALYTES	RESULTS	UNITS	SRL	TRIGGER	MCL	EXCEEDS	
	EPA REGULATED						Trigger?	MCL?
45	Vinyl Chloride	ND	ug/L	0.5	0.5	2	NO	NO
46	1,1 - Dichloroethylene	ND	ug/L	0.5	0.5	7	NO	NO
47	1,1,1 - Trichloroethane	ND	ug/L	0.5	0.5	200	NO	NO
48	Carbon Tetrachloride	ND	ug/L	0.5	0.5	5	NO	NO
49	Benzene	ND	ug/L	0.5	0.5	5	NO	NO
50	1,2 - Dichloroethane	ND	ug/L	0.5	0.5	5	NO	NO
51	Trichloroethylene	ND	ug/L	0.5	0.5	5	NO	NO
52	1,4 - Dichlorobenzene	ND	ug/L	0.5	0.5	75	NO	NO
56	Dichloromethane	ND	ug/L	0.5	0.5	5	NO	NO
57	trans-1,2 - Dichloroethylene	ND	ug/L	0.5	0.5	100	NO	NO
60	cis-1,2 - Dichloroethylene	ND	ug/L	0.5	0.5	70	NO	NO
63	1,2 - Dichloropropane	ND	ug/L	0.5	0.5	5	NO	NO
66	Toluene	ND	ug/L	0.5	0.5	1000	NO	NO
67	1,1,2 - Trichloroethane	ND	ug/L	0.5	0.5	5	NO	NO
68	Tetrachloroethylene	ND	ug/L	0.5	0.5	5	NO	NO
71	Chlorobenzene	ND	ug/L	0.5	0.5	100	NO	NO
73	Ethylbenzene	ND	ug/L	0.5	0.5	700	NO	NO
76	Styrene	ND	ug/L	0.5	0.5	100	NO	NO
84	1,2 - Dichlorobenzene	ND	ug/L	0.5	0.5	600	NO	NO
95	1,2,4 - Trichlorobenzene	ND	ug/L	0.5	0.5	70	NO	NO
160	Total Xylenes	ND	ug/L	0.5	0.5	10000	NO	NO
74	m/p Xylenes (MCL for Total)	ND	ug/L	0.5	0.5		NO	
75	o - Xylene (MCL for Total)	ND	ug/L	0.5	0.5		NO	
	EPA UNREGULATED							
27	Chloroform	3.1	ug/L	0.5	0.5		Yes	
28	Bromodichloromethane	ND	ug/L	0.5	0.5		NO	
29	Chlorodibromomethane	ND	ug/L	0.5	0.5		NO	
30	Bromoform	ND	ug/L	0.5	0.5		NO	
53	Chloromethane	ND	ug/L	0.5	0.5		NO	
54	Bromomethane	ND	ug/L	0.5	0.5		NO	
55	Chloroethane	ND	ug/L	0.5	0.5		NO	

Water Management Laboratories, Inc.
1515 80th St. E.
Tacoma, WA 98404
(253) 531-3121

DOH #	ANALYTES	RESULTS	UNITS	SRL	TRIGGER	MCL	EXCEEDS	
	EPA UNREGULATED (Continued)						Trigger?	MCL?
58	1,1 - Dichloroethane	ND	ug/L	0.5	0.5		NO	
59	2,2 - Dichloropropane	ND	ug/L	0.5	0.5		NO	
62	1,1 - Dichloropropene	ND	ug/L	0.5	0.5		NO	
64	Dibromomethane	ND	ug/L	0.5	0.5		NO	
70	1,3 - Dichloropropane	ND	ug/L	0.5	0.5		NO	
72	1,1,1,2 - Tetrachlroroethane	ND	ug/L	0.5	0.5		NO	
78	Bromobenzene	ND	ug/L	0.5	0.5		NO	
79	1,2,3 - Trichloropropane	ND	ug/L	0.5	0.5		NO	
80	1,1,2,2 - Tetrachloroethane	ND	ug/L	0.5	0.5		NO	
81	o - Chlorotoluene	ND	ug/L	0.5	0.5		NO	
82	p - Chlorotoluene	ND	ug/L	0.5	0.5		NO	
83	m - Dichlorobenzene	ND	ug/L	0.5	0.5		NO	
154	1,3 - Dichloropropene	ND	ug/L	0.5	0.5		NO	
	STATE UNREGULATED							
65	cis-1,3 - Dichloropropene	ND	ug/L	0.5	0.5		NO	
69	trans-1,3 - Dichloropropene	ND	ug/L	0.5	0.5		NO	
85	Fluorotrichloromethane	ND	ug/L	0.5	0.5		NO	
86	Bromochloromethane	ND	ug/L	0.5	0.5		NO	
87	Isopropylbenzene	ND	ug/L	0.5	0.5		NO	
88	n - Propylbenzene	ND	ug/L	0.5	0.5		NO	
89	1,3,5 - Trimethylbenzene	ND	ug/L	0.5	0.5		NO	
90	t - Butylbenzene	ND	ug/L	0.5	0.5		NO	
91	1,2,4 - Trimethylbenzene	ND	ug/L	0.5	0.5		NO	
92	s - Butylbenzene	ND	ug/L	0.5	0.5		NO	
93	p - Isopropyltoluene	ND	ug/L	0.5	0.5		NO	
94	n - Butylbenzene	ND	ug/L	0.5	0.5		NO	
96	Napthalene	ND	ug/L	0.5	0.5		NO	
97	Hexachlorobutadiene	ND	ug/L	0.5	0.5		NO	
98	1,2,3 - Trichlorobenzene	ND	ug/L	0.5	0.5		NO	
102	EDB (Confirm by 504.1)	ND	ug/L	0.5	0.5		NO	
103	DBCP (Confirm by 504.1)	ND	ug/L	0.5	0.5		NO	
162	Dichlorodifluoromethane	ND	ug/L	0.5	0.5		NO	
N/A	Nitrobenzene	ND	ug/L					
N/A	MTBE	ND	ug/L	0.5	0.5		NO	

NOTES:

SRL (State Reporting Level): Indicates the minimum reporting level required by the Washington Department of Health (DOH).

Trigger Level: DOH Drinking Water response level. Systems with compounds detected at concentrations in excess of this level are required to take additional samples. Contact your regional DOH office for further information.

MCL (Maximum Contaminant Level): If the contaminant amount exceeds the MCL, immediately contact your regional DOH office.

NA (Not Analyzed): In the RESULTS column indicates this compound was not included in the current analysis.

ND (Not Detected): In the RESULTS column indicates this compound was analyzed and not detected at a level greater than or equal to the SRL.

< : Indicates less than.

Comments :

A maximum contaminant level of 80 ug/L total Trihalomethanes (Compounds 27-30) is allowed.

Method 524: VOC's

WATER MANAGEMENT LABORATORIES INC.

1515 80th St. E.
Tacoma, WA 98404
(253) 531-3121

VOLATILE ORGANIC CHEMICALS (VOC's) ANALYSIS REPORT
EPA TEST METHOD - 524.2

System ID No.: 315690	System Name: Harstene Pointe		
Lab/Sample No.: 08970035	Date Collected: 12/01/03		DOH Source No.: S01
Multiple Source Nos.: N/A	Sample Type: A		Sample Purpose: C
Date Received: 12/02/03	Date Reported: 12/03/03	Supervisor:	
	Date Analyzed: 12/02/03	Analyst: LHL	
County: Mason	Group: A		
Sample Location: #1 Filter Room			
Send To: Mason County Utilities & Waste Management/ Attn: Tom Moore P.O.Box 578; Shelton, WA 98584	Remarks:		

S01 = Well 1

DOH #	ANALYTES	RESULTS	UNITS	SRL	TRIGGER	MCL	EXCEEDS	
		EPA REGULATED					Trigger?	MCL?
45	Vinyl Chloride	ND	ug/L	0.5	0.5	2	NO	NO
46	1,1 - Dichloroethylene	ND	ug/L	0.5	0.5	7	NO	NO
47	1,1,1 - Trichloroethane	ND	ug/L	0.5	0.5	200	NO	NO
48	Carbon Tetrachloride	ND	ug/L	0.5	0.5	5	NO	NO
49	Benzene	ND	ug/L	0.5	0.5	5	NO	NO
50	1,2 - Dichloroethane	ND	ug/L	0.5	0.5	5	NO	NO
51	Trichloroethylene	ND	ug/L	0.5	0.5	5	NO	NO
52	1,4 - Dichlorobenzene	ND	ug/L	0.5	0.5	75	NO	NO
56	Dichloromethane	ND	ug/L	0.5	0.5	5	NO	NO
57	trans-1,2 - Dichloroethylene	ND	ug/L	0.5	0.5	100	NO	NO
60	cis-1,2 - Dichloroethylene	ND	ug/L	0.5	0.5	70	NO	NO
63	1,2 - Dichloropropane	ND	ug/L	0.5	0.5	5	NO	NO
66	Toluene	ND	ug/L	0.5	0.5	1000	NO	NO
67	1,1,2 - Trichloroethane	ND	ug/L	0.5	0.5	5	NO	NO
68	Tetrachloroethylene	ND	ug/L	0.5	0.5	5	NO	NO
71	Chlorobenzene	ND	ug/L	0.5	0.5	100	NO	NO
73	Ethylbenzene	ND	ug/L	0.5	0.5	700	NO	NO
76	Styrene	ND	ug/L	0.5	0.5	100	NO	NO
84	1,2 - Dichlorobenzene	ND	ug/L	0.5	0.5	600	NO	NO
95	1,2,4 - Trichlorobenzene	ND	ug/L	0.5	0.5	70	NO	NO
160	Total Xylenes	ND	ug/L	0.5	0.5	10000	NO	NO
74	m/p Xylenes (MCL for Total)	ND	ug/L	0.5	0.5		NO	
75	o - Xylene (MCL for Total)	ND	ug/L	0.5	0.5		NO	
		EPA UNREGULATED						
27	Chloroform	13.7	ug/L	0.5	0.5		Yes	
28	Bromodichloromethane	1.1	ug/L	0.5	0.5		Yes	
29	Chlorodibromomethane	ND	ug/L	0.5	0.5		NO	
30	Bromoform	ND	ug/L	0.5	0.5		NO	
53	Chloromethane	ND	ug/L	0.5	0.5		NO	
54	Bromomethane	ND	ug/L	0.5	0.5		NO	
55	Chloroethane	ND	ug/L	0.5	0.5		NO	

Water Management Laboratories, Inc.
1515 80th St. E.
Tacoma, WA 98404
(253) 531-3121

DOH #	ANALYTES	RESULTS	UNITS	SRL	TRIGGER	MCL	EXCEEDS	
	EPA UNREGULATED (Continued)						Trigger?	MCL?
58	1,1 - Dichloroethane	ND	ug/L	0.5	0.5		NO	
59	2,2 - Dichloropropane	ND	ug/L	0.5	0.5		NO	
62	1,1 - Dichloropropene	ND	ug/L	0.5	0.5		NO	
64	Dibromomethane	ND	ug/L	0.5	0.5		NO	
70	1,3 - Dichloropropane	ND	ug/L	0.5	0.5		NO	
72	1,1,1,2 - Tetrachlroroethane	ND	ug/L	0.5	0.5		NO	
78	Bromobenzene	ND	ug/L	0.5	0.5		NO	
79	1,2,3 - Trichloropropane	ND	ug/L	0.5	0.5		NO	
80	1,1,2,2 - Tetrachloroethane	ND	ug/L	0.5	0.5		NO	
81	o - Chlorotoluene	ND	ug/L	0.5	0.5		NO	
82	p - Chlorotoluene	ND	ug/L	0.5	0.5		NO	
83	m - Dichlorobenzene	ND	ug/L	0.5	0.5		NO	
154	1,3 - Dichloropropene	ND	ug/L	0.5	0.5		NO	
	STATE UNREGULATED							
65	cis-1,3 - Dichloropropene	ND	ug/L	0.5	0.5		NO	
69	trans-1,3 - Dichloropropene	ND	ug/L	0.5	0.5		NO	
85	Fluorotrichloromethane	ND	ug/L	0.5	0.5		NO	
86	Bromochloromethane	ND	ug/L	0.5	0.5		NO	
87	Isopropylbenzene	ND	ug/L	0.5	0.5		NO	
88	n - Propylbenzene	ND	ug/L	0.5	0.5		NO	
89	1,3,5 - Trimethylbenzene	ND	ug/L	0.5	0.5		NO	
90	t - Butylbenzene	ND	ug/L	0.5	0.5		NO	
91	1,2,4 - Trimethylbenzene	ND	ug/L	0.5	0.5		NO	
92	s - Butylbenzene	ND	ug/L	0.5	0.5		NO	
93	p - Isopropyltoluene	ND	ug/L	0.5	0.5		NO	
94	n - Butylbenzene	ND	ug/L	0.5	0.5		NO	
96	Napthalene	ND	ug/L	0.5	0.5		NO	
97	Hexachlorobutadiene	ND	ug/L	0.5	0.5		NO	
98	1,2,3 - Trichlorobenzene	ND	ug/L	0.5	0.5		NO	
102	EDB (Confirm by 504.1)	ND	ug/L	0.5	0.5		NO	
103	DBCP (Confirm by 504.1)	ND	ug/L	0.5	0.5		NO	
162	Dichlorodifluoromethane	ND	ug/L	0.5	0.5		NO	
N/A	Nitrobenzene	ND	ug/L					
N/A	MTBE	ND	ug/L	0.5	0.5		NO	

NOTES:

SRL (State Reporting Level): Indicates the minimum reporting level required by the Washington Department of Health (DOH).

Trigger Level: DOH Drinking Water response level. Systems with compounds detected at concentrations in excess of this level are required to take additional samples. Contact your regional DOH office for further information.

MCL (Maximum Contaminant Level): If the contaminant amount exceeds the MCL, immediately contact your regional DOH office.

NA (Not Analyzed): In the RESULTS column indicates this compound was not included in the current analysis.

ND (Not Detected): In the RESULTS column indicates this compound was analyzed and not detected at a level greater than or equal to the SRL.

< : Indicates less than.

Comments :

A maximum contaminant level of 80 ug/L total Trihalomethanes (Compounds 27-30) is allowed.

Method 524: VOC's

WATER MANAGEMENT LABORATORIES INC.

1515 80th St. E.
Tacoma, WA 98404
(253) 531-3121

VOLATILE ORGANIC CHEMICALS (VOC's) ANALYSIS REPORT
EPA TEST METHOD - 524.2

System ID No.: 315690	System Name: Harstene Point	
Lab/Sample No.: 08973428	Date Collected: 07/19/06	DOH Source No.: S01
Multiple Source Nos.: N/A	Sample Type: B	Sample Purpose: C
Date Received: 07/20/06	Date Reported: 07/26/06	Supervisor: WMA
	Date Analyzed: 07/25/06	Analyst: LHL
County: Mason	Group: A	
Sample Location: Well 1		
Send To: Mason County Utilities & Waste Management P.O.Box 578; Shelton, WA 98584	Remarks:	

DOH #	ANALYTES	RESULTS	UNITS	SRL	TRIGGER	MCL	EXCEEDS	
		EPA REGULATED					Trigger?	MCL?
45	Vinyl Chloride	ND	ug/L	0.5	0.5	2	NO	NO
46	1,1 - Dichloroethylene	ND	ug/L	0.5	0.5	7	NO	NO
47	1,1,1 - Trichloroethane	ND	ug/L	0.5	0.5	200	NO	NO
48	Carbon Tetrachloride	ND	ug/L	0.5	0.5	5	NO	NO
49	Benzene	ND	ug/L	0.5	0.5	5	NO	NO
50	1,2 - Dichloroethane	ND	ug/L	0.5	0.5	5	NO	NO
51	Trichloroethylene	ND	ug/L	0.5	0.5	5	NO	NO
52	1,4 - Dichlorobenzene	ND	ug/L	0.5	0.5	75	NO	NO
56	Dichloromethane	ND	ug/L	0.5	0.5	5	NO	NO
57	trans-1,2 - Dichloroethylene	ND	ug/L	0.5	0.5	100	NO	NO
60	cis-1,2 - Dichloroethylene	ND	ug/L	0.5	0.5	70	NO	NO
63	1,2 - Dichloropropane	ND	ug/L	0.5	0.5	5	NO	NO
66	Toluene	ND	ug/L	0.5	0.5	1000	NO	NO
67	1,1,2 - Trichloroethane	ND	ug/L	0.5	0.5	5	NO	NO
68	Tetrachloroethylene	ND	ug/L	0.5	0.5	5	NO	NO
71	Chlorobenzene	ND	ug/L	0.5	0.5	100	NO	NO
73	Ethylbenzene	ND	ug/L	0.5	0.5	700	NO	NO
76	Styrene	ND	ug/L	0.5	0.5	100	NO	NO
84	1,2 - Dichlorobenzene	ND	ug/L	0.5	0.5	600	NO	NO
95	1,2,4 - Trichlorobenzene	ND	ug/L	0.5	0.5	70	NO	NO
160	Total Xylenes	ND	ug/L	0.5	0.5	10000	NO	NO
74	m/p Xylenes (MCL for Total)	ND	ug/L	0.5	0.5		NO	
75	o - Xylene (MCL for Total)	ND	ug/L	0.5	0.5		NO	
		EPA UNREGULATED						
27	Chloroform	ND	ug/L	0.5	0.5		NO	
28	Bromodichloromethane	ND	ug/L	0.5	0.5		NO	
29	Chlorodibromomethane	ND	ug/L	0.5	0.5		NO	
30	Bromoform	ND	ug/L	0.5	0.5		NO	
53	Chloromethane	ND	ug/L	0.5	0.5		NO	
54	Bromomethane	ND	ug/L	0.5	0.5		NO	
55	Chloroethane	ND	ug/L	0.5	0.5		NO	

Water Management Laboratories, Inc.
1515 80th St. E.
Tacoma, WA 98404
(253) 531-3121

DOH #	ANALYTES	RESULTS	UNITS	SRL	TRIGGER	MCL	EXCEEDS	
EPA UNREGULATED (Continued)							Trigger?	MCL?
58	1,1 - Dichloroethane	ND	ug/L	0.5	0.5		NO	
59	2,2 - Dichloropropane	ND	ug/L	0.5	0.5		NO	
62	1,1 - Dichloropropene	ND	ug/L	0.5	0.5		NO	
64	Dibromomethane	ND	ug/L	0.5	0.5		NO	
70	1,3 - Dichloropropane	ND	ug/L	0.5	0.5		NO	
72	1,1,1,2 - Tetrachlroroethane	ND	ug/L	0.5	0.5		NO	
78	Bromobenzene	ND	ug/L	0.5	0.5		NO	
79	1,2,3 - Trichloropropane	ND	ug/L	0.5	0.5		NO	
80	1,1,2,2 - Tetrachloroethane	ND	ug/L	0.5	0.5		NO	
81	o - Chlorotoluene	ND	ug/L	0.5	0.5		NO	
82	p - Chlorotoluene	ND	ug/L	0.5	0.5		NO	
83	m - Dichlorobenzene	ND	ug/L	0.5	0.5		NO	
154	1,3 - Dichloropropene	ND	ug/L	0.5	0.5		NO	
STATE UNREGULATED								
65	cis-1,3 - Dichloropropene	ND	ug/L	0.5	0.5		NO	
69	trans-1,3 - Dichloropropene	ND	ug/L	0.5	0.5		NO	
85	Fluorotrichloromethane	ND	ug/L	0.5	0.5		NO	
86	Bromochloromethane	ND	ug/L	0.5	0.5		NO	
87	Isopropylbenzene	ND	ug/L	0.5	0.5		NO	
88	n - Propylbenzene	ND	ug/L	0.5	0.5		NO	
89	1,3,5 - Trimethylbenzene	ND	ug/L	0.5	0.5		NO	
90	t - Butylbenzene	ND	ug/L	0.5	0.5		NO	
91	1,2,4 - Trimethylbenzene	ND	ug/L	0.5	0.5		NO	
92	s - Butylbenzene	ND	ug/L	0.5	0.5		NO	
93	p - Isopropyltoluene	ND	ug/L	0.5	0.5		NO	
94	n - Butylbenzene	ND	ug/L	0.5	0.5		NO	
96	Napthalene	ND	ug/L	0.5	0.5		NO	
97	Hexachlorobutadiene	ND	ug/L	0.5	0.5		NO	
98	1,2,3 - Trichlorobenzene	ND	ug/L	0.5	0.5		NO	
102	EDB (Confirm by 504.1)	ND	ug/L	0.5	0.5		NO	
103	DBCP (Confirm by 504.1)	ND	ug/L	0.5	0.5		NO	
162	Dichlorodifluoromethane	ND	ug/L	0.5	0.5		NO	
N/A	Nitrobenzene	ND	ug/L					
N/A	MTBE	ND	ug/L	0.5	0.5		NO	

NOTES:

SRL (State Reporting Level): Indicates the minimum reporting level required by the Washington Department of Health (DOH).

Trigger Level: DOH Drinking Water response level. Systems with compounds detected at concentrations in excess of this level may need to take additional samples. Contact your regional DOH office for further information.

MCL (Maximum Contaminant Level): If the contaminant amount exceeds the MCL, immediately contact your regional DOH office.

NA (Not Analyzed): In the RESULTS column indicates this compound was not included in the current analysis.

ND (Not Detected): In the RESULTS column indicates this compound was analyzed and not detected at a level greater than or equal to the SRL.

< : Indicates less than.

Comments:

A maximum contaminant level of 80 ug/L total Trihalomethanes (Compounds 27-30) is allowed.

Method 524.2: VOC's

WATER MANAGEMENT LABORATORIES INC.
1515 80th St. E.
Tacoma, WA 98404
(253) 531-3121

RECEIVED
JUN 30 2006
MASON CO. UTILITIES

INORGANIC CHEMICALS (IOC's) REPORT For LEAD & COPPER

System ID No.: 315690	System Name: Harstene Pointe	
DOH Source No: S93 (LCR)	Sample Type: A	Sample Purpose: C
Date Received: 06-15-06	Date Reported: 06-23-06	Supervisor: DMB
Date Analyzed: 06-20-06	Analyst: JMB	Group: A
County: Mason		Sample Location: (see table below)
Send To: Mason County Utilities and Waste PO Box 578 Shelton, WA 98584	Bill To:	

DOH #	23 (Copper)	9 (Lead)
State Reporting Level (SRL)	0.02 mg/L	0.002 mg/L
Action Level (AL)	1.3 mg/L	0.015 mg/L
Test Method	3111B	3113B

Lab Sample No.	Date Collected	Site/Location	Copper (mg/L)	Lead (mg/L)
08931060	06-14-06	569 Pointes Drive W	0.12	<0.002
08931061	06-14-06	513 Pointes Drive W	0.10	0.038
08931062	06-14-06	408 Pointes Drive E	0.27	<0.002
08931063	06-14-06	793 Chesapeake Drive	0.14	<0.002
08931064	06-14-06	Clubhouse Kitchen	<0.02	<0.002

NOTES:

1mg/L is equivalent to 1 ppM

AL (Federal Action Levels): are 0.015 mg/L for Lead and 1.3 mg/L for Copper. If the concentrations exceed these levels, contact your regional DOH office for further information.

SRL (State Reporting Level): Indicates the minimum reporting level required by the Washington Department of Health (DOH).

NA (Not Analyzed): In the RESULTS column indicates this compound was not included in the current analysis.

ND (Not Detected): In the RESULTS column indicates this compound was analyzed and not detected at a level greater than or equal to the SRL.

< : Indicates less than.

Comments: 08910512
Lead & Copper

WATER MANAGEMENT LABORATORIES INC.
1515 80th St. E.
Tacoma, WA 98404
(253) 531-3121

RECEIVED
JUN 30 2006
MASON CO. UTILITIES

INORGANIC CHEMICALS (IOC's) REPORT For LEAD & COPPER

System ID No.: 315690	System Name: Harstene Pointe	
DOH Source No: S93 (LCR)	Sample Type: A	Sample Purpose: C
Date Received: 06-15-06	Date Reported: 06-23-06	Supervisor: DMB
Date Analyzed: 06-20-06	Analyst: JMB	Group: A
County: Mason		Sample Location: (see table below)
Send To: Mason County Utilities and Waste PO Box 578 Shelton, WA 98584	Bill To:	

DOH #	23 (Copper)	9 (Lead)
State Reporting Level (SRL)	0.02 mg/L	0.002 mg/L
Action Level (AL)	1.3 mg/L	0.015 mg/L
Test Method	3111B	3113B

Lab Sample No.	Date Collected	Site/Location	Copper (mg/L)	Lead (mg/L)
08931060	06-14-06	569 Pointes Drive W	0.12	<0.002
08931061	06-14-06	513 Pointes Drive W	0.10	0.038
08931062	06-14-06	408 Pointes Drive E	0.27	<0.002
08931063	06-14-06	793 Chesapeake Drive	0.14	<0.002
08931064	06-14-06	Clubhouse Kitchen	<0.02	<0.002

NOTES:

1mg/L is equivalent to 1 ppM

AL (Federal Action Levels): are 0.015 mg/L for Lead and 1.3 mg/L for Copper. If the concentrations exceed these levels, contact your regional DOH office for further information.

SRL (State Reporting Level): Indicates the minimum reporting level required by the Washington Department of Health (DOH).

NA (Not Analyzed): In the RESULTS column indicates this compound was not included in the current analysis.

ND (Not Detected): In the RESULTS column indicates this compound was analyzed and not detected at a level greater than or equal to the SRL.

< : Indicates less than.

Comments: **08910512**
Lead & Copper

USE INK PEN

MANAGEMENT LABORATORIES INC.
Tacoma, WA 98404
(253) 531-3121

FYI

INORGANIC CHEMICALS (IOCS) REPORT

System ID No: 315690	System Name: Harstene Point	
Lab/Sample No: 08910362	Date Collected: 6-7-06	DOH Source No: S02
Multiple Source Nos: N/A	Sample Type: A	Sample Purpose: C
Date Received: 6-8-06	Date Reported: 06-10-06	Supervisor: W.H.
County: Mason	Date Digested: NA	Group: (A) B Other
Sample Location: Well #2		
Send Results & Bill To: Mason County Utilities PO Box 548 Shelton WA 98584		Remarks:

DOH#	ANALYTES	RESULTS	UNITS	SRL	TRIGGER	MCL	EXCEEDS Trigger?	EXCEEDS MCL?	Method/Analyst	
	EPA REGULATED									
4	Arsenic	0.028	mg/l	0.002	0.05	0.05	YES	YES	3113B	DMS
5	Barium	NA	mg/l	0.1	2	2			3113B	
6	Cadmium		mg/l	0.002	0.005	0.005			3113B	
7	Chromium		mg/l	0.01	0.1	0.1			3113B	
11	Mercury		mg/l	0.0005	0.002	0.002			3112B	
12	Selenium		mg/l	0.005	0.05	0.05			3113B	
110	Beryllium		mg/l	0.003	0.004	0.004			3113B	
111	Nickel		mg/l	0.04	0.1	0.1			3111B	
112	Antimony		mg/l	0.005	0.006	0.006			3113B	
113	Thallium		mg/l	0.002	0.002	0.002			200.9	
116	Cyanide		mg/l	0.05	0.2	0.2			4500-CNF	
19	Fluoride		mg/l	0.2	2	4			4110B	
114	Nitrite - N		mg/l	0.5	0.5	1			4110B	
20	Nitrate - N		mg/l	0.5	5	10			4110B	
161	Total Nitrate/Nitrite		mg/l	0.5	5	10			4110B	
	EPA REGULATED (Secondary)									
8	Iron	NA	mg/l	0.1	0.3	0.3			3111B	
10	Manganese		mg/l	0.01	0.05	0.05			3111B	
13	Silver		mg/l	0.01	0.1	0.1			3111B	
21	Chloride		mg/l	20	250	250			4110B	
22	Sulfate		mg/l	10	250	250			4110B	
24	Zinc		mg/l	0.2	5	5			3111B	
	STATE REGULATED									
14	Sodium	NA	mg/l	5					3111B	
15	Hardness		mg/l	10					2340C	
16	Conductivity		umhos/cm	10	700	700			2510B	
17	Turbidity		NTU	0.1	1				2130B	
18	Color		color units	5	15	15			2120B	
26	Total Dissolved Solids		mg/l	150	500	500			2540C	
	STATE UNREGULATED									
9	Lead	NA	mg/l	0.002					3113B	
23	Copper		mg/l	0.02					3111B	

COMMENTS: Arsenic

S02 = Well 2

LAB USE ONLY: BAC ( ) VOC ( ) SOC ( ) MISC ( )

1986 © PROPERTY OF WATER MANAGEMENT LABORATORIES, INC.

Revised 2003

USE HEAVY PEN

MANAGEMENT LABORATORIES INC.

Tacoma, WA 98404
(253) 531-3121

Fisher

INORGANIC CHEMICALS (IOCS) REPORT

System ID No: 315690	System Name: Harstene Point	
Lab/Sample No: 08904986	Date Collected: 7-27-05	DOH Source No: S01
Multiple Source Nos: N/A	Sample Type: A	Sample Purpose: C
Date Received: 7-28-05	Date Reported: 7-29-05	Supervisor: WM
County: Mason	Date Digested: NA	Group: (A) B Other
Sample Location: Wellhouse #1		
Send Results & Bill To: Mason County Utilities + Waste Management P.O. Box 578 Shelton, WA 98584		Remarks: AM1306R

DOH#	ANALYTES	RESULTS	UNITS	SRL	TRIGGER	MCL	EXCEEDS Trigger?	EXCEEDS MCL?	Method/Analyst	
	EPA REGULATED									
4	Arsenic	0.009	mg/l	0.002	0.05	0.05	NO	NO	3113B	TMB
5	Barium	NA	mg/l	0.1	2	2			3113B	
6	Cadmium		mg/l	0.002	0.005	0.005			3113B	
7	Chromium		mg/l	0.01	0.1	0.1			3113B	
11	Mercury		mg/l	0.0005	0.002	0.002			3112B	
12	Selenium		mg/l	0.005	0.05	0.05			3113B	
110	Beryllium		mg/l	0.003	0.004	0.004			3113B	
111	Nickel		mg/l	0.04	0.1	0.1			3111B	
112	Antimony		mg/l	0.005	0.006	0.006			3113B	
113	Thallium		mg/l	0.002	0.002	0.002			200.9	
116	Cyanide		mg/l	0.05	0.2	0.2			4500-CNF	
19	Fluoride		mg/l	0.2	2	4			4110B	
114	Nitrite - N		mg/l	0.5	0.5	1			4110B	
20	Nitrate - N		mg/l	0.5	5	10			4110B	
161	Total Nitrate/Nitrite		mg/l	0.5	5	10			4110B	
	EPA REGULATED (Secondary)									
8	Iron	NA	mg/l	0.1	0.3	0.3			3111B	
10	Manganese		mg/l	0.01	0.05	0.05			3111B	
13	Silver		mg/l	0.01	0.1	0.1			3111B	
21	Chloride		mg/l	20	250	250			4110B	
22	Sulfate		mg/l	10	250	250			4110B	
24	Zinc		mg/l	0.2	5	5			3111B	
	STATE REGULATED									
14	Sodium	NA	mg/l	5					3111B	
15	Hardness		mg/l	10					2340C	
16	Conductivity		umhos/cm	10	700	700			2510B	
17	Turbidity		NTU	0.1	1				2130B	
18	Color		color units	5	15	15			2120B	
26	Total Dissolved Solids		mg/l	150	500	500			2540C	
	STATE UNREGULATED									
9	Lead	NA	mg/l	0.002					3113B	
23	Copper		mg/l	0.02					3111B	

COMMENTS: Arsenic

LAB USE ONLY: BAC ( ) VOC ( ) SOC ( ) MISC ( )

1986 © PROPERTY OF WATER MANAGEMENT LABORATORIES, INC.

USE HEAVY PEN

MANAGEMENT LABORATORIES INC.
Tacoma, WA 98404
(253) 531-3121

Fischer

INORGANIC CHEMICALS (IOCS) REPORT

System ID No: 315670	System Name: HARSTENE POINT	
Lab/Sample No: 08904985	Date Collected: 7-27-05	DOH Source No: 002
Multiple Source Nos: N/A	Sample Type: A	Sample Purpose: C
Date Received: 7-28-05	Date Reported: 7-29-05	Supervisor: WMA
County: Mason	Date Digested: NA	Group: (A) B Other
Sample Location: Wellhouse #2		
Send Results & Bill To: Mason County Utilities Tom Moore PO Box 578, Shelton WA 98584		Remarks:

DOH#	ANALYTES	RESULTS	UNITS	SRL	TRIGGER	MCL	EXCEEDS Trigger?	EXCEEDS MCL?	Method/Analyst	
	EPA REGULATED									
4	Arsenic	0.027	mg/l	0.002	0.05	0.05	NO	NO	3113B	JMO
5	Barium	NA	mg/l	0.1	2	2			3113B	
6	Cadmium		mg/l	0.002	0.005	0.005			3113B	
7	Chromium		mg/l	0.01	0.1	0.1			3113B	
11	Mercury		mg/l	0.0005	0.002	0.002			3112B	
12	Selenium		mg/l	0.005	0.05	0.05			3113B	
110	Beryllium		mg/l	0.003	0.004	0.004			3113B	
111	Nickel		mg/l	0.04	0.1	0.1			3111B	
112	Antimony		mg/l	0.005	0.006	0.006			3113B	
113	Thallium		mg/l	0.002	0.002	0.002			200.9	
116	Cyanide		mg/l	0.05	0.2	0.2			4500-CNF	
19	Fluoride		mg/l	0.2	2	4			4110B	
114	Nitrite - N		mg/l	0.5	0.5	1			4110B	
20	Nitrate - N		mg/l	0.5	5	10			4110B	
161	Total Nitrate/Nitrite		mg/l	0.5	5	10			4110B	
	EPA REGULATED (Secondary)									
8	Iron	NA	mg/l	0.1	0.3	0.3			3111B	
10	Manganese		mg/l	0.01	0.05	0.05			3111B	
13	Silver		mg/l	0.01	0.1	0.1			3111B	
21	Chloride		mg/l	20	250	250			4110B	
22	Sulfate		mg/l	10	250	250			4110B	
24	Zinc		mg/l	0.2	5	5			3111B	
	STATE REGULATED									
14	Sodium	NA	mg/l	5					3111B	
15	Hardness		mg/l	10					2340C	
16	Conductivity		umhos/cm	10	700	700			2510B	
17	Turbidity		NTU	0.1	1				2130B	
18	Color		color units	5	15	15			2120B	
26	Total Dissolved Solids		mg/l	150	500	500			2540C	
	STATE UNREGULATED									
9	Lead	NA	mg/l	0.002					3113B	
23	Copper		mg/l	0.02					3111B	

COMMENTS: Arsenic

LAB USE ONLY: BAC ( ) VOC ( ) SOC ( ) MISC ( )

1986 © PROPERTY OF WATER MANAGEMENT LABORATORIES, INC.

Revised 2003

Please Print Plainly

USE HEAVY PEN
DO NOT WRITE IN SHADED AREAS

WATER MANAGEMENT LABORATORIES INC.

1515 80th St. E.
Tacoma, WA 98404
(253) 531-3121

SEE BACK FOR INSTRUCTIONS

INORGANIC CHEMICALS (IOCS) REPORT

System ID No: 315690 System Name: Hartstene Pointe

Lab/Sample No: 08952778 Date Collected: 11-28-01 DOH Source No: S01

Multiple Source Nos: N/A Sample Type: A Sample Purpose: C

Date Received: 11-29-01 Date Reported: 12-4-01 Supervisor: [illegible]

County: Mason Date Digested: NA Group: (A) B Other

Sample Location: Sample tap on filter effluent

Send Report To: Mason County Utilities
Waste Management, PO Box 578
Shelton, WA 98584

Bill To:

DOH#	ANALYTES	RESULTS	UNITS	SRL	TRIGGER	MCL	EXCEEDS Trigger?	EXCEEDS MCL?	Method/Analyst	
	EPA REGULATED									
4	Arsenic	<0.01	mg/l	0.01	0.05	0.05	NO	NO	3113B	[illegible]
5	Barium	<0.1	mg/l	0.1	2	2			3113B	[illegible]
6	Cadmium	<0.002	mg/l	0.002	0.005	0.005			3113B	[illegible]
7	Chromium	<0.01	mg/l	0.01	0.1	0.1			3113B	[illegible]
11	Mercury	<0.0005	mg/l	0.0005	0.002	0.002			3112B	[illegible]
12	Selenium	<0.005	mg/l	0.005	0.05	0.05			3113B	[illegible]
110	Beryllium	<0.002	mg/l	0.003	0.004	0.004			3113B	[illegible]
111	Nickel	<0.04	mg/l	0.04	0.1	0.1			3111B	[illegible]
112	Antimony	<0.002	mg/l	0.005	0.006	0.006			3113B	[illegible]
113	Thallium	<0.001	mg/l	0.002	0.002	0.002			3113B	[illegible]
116	Cyanide	<0.05	mg/l	0.05	0.2	0.2			4500-CNF	[illegible]
19	Flouride	<0.2	mg/l	0.2	2	4			4110B	LHL
114	Nitrite - N	<0.2	mg/l	0.5	0.5	1			4110B	LHL
20	Nitrate - N	<0.2	mg/l	0.5	5	10			4110B	LHL
161	Total Nitrate/Nitrite	<0.4	mg/l	0.5	5	10			4110B	LHL
	EPA REGULATED (Secondary)									
8	Iron	<0.05	mg/l	0.1	0.3	0.3	NO	NO	3111B	[illegible]
10	Manganese	<0.01	mg/l	0.01	0.05	0.05			3111B	[illegible]
13	Silver	<0.01	mg/l	0.01	0.1	0.1			3111B	[illegible]
21	Chloride	2	mg/l	20	250	250			4110B	LHL
22	Sulfate	<1	mg/l	10	250	250			4110B	LHL
24	Zinc	<0.05	mg/l	0.2	5	5			3111B	[illegible]
	STATE REGULATED									
14	Sodium	11	mg/l	5					3111B	[illegible]
15	Hardness	86	mg/l	10					2340C	LHL
16	Conductivity	209	umhos/cm	10	700	700	NO	NO	2510B	JMB
17	Turbidity	0.1	NTU	0.1	1		NO		2130B	JMB
18	Color	<5	color units	5	15	15	NO	NO	2120B	JMB
26	Total Dissolved Solids	NA	mg/l	150	500	500	—	—	2540C	—
	STATE UNREGULATED									
9	Lead	<0.002	mg/l	0.002					3113B	[illegible]
23	Copper	<0.02	mg/l	0.2					3111B	[illegible]

COMMENTS: FC28

2/6/02 CORRECTION [illegible]

1986 * PROPERTY OF WATER MANAGEMENT LABORATORIES, INC.

Please Print Plainly
USE HEAVY PEN

WATER MANAGEMENT LABORATORIES INC.

1515 80th St. E.
Tacoma, WA 98404
(253) 531-3121

TOM FISCHER

SEE BACK FOR INSTRUCTIONS

INORGANIC CHEMICALS (IOCS) REPORT

System ID No: 31560	System Name: HARSTENE POINT	
Lab/Sample No: 08904985	Date Collected: 7-27-05	DOH Source No: 002
Multiple Source Nos: N/A	Sample Type: A	Sample Purpose: C
Date Received: 7-28-05	Date Reported: 7-29-05	Supervisor: WMA
County: Mason	Date Digested: NA	Group: (A) B Other
Sample Location: WELLHOUSE #2		
Send Results & Bill To: Mason County Utilities		Remarks:
Tom Moore		
PO Box 578 Shelton WA 98584		

DOH#	ANALYTES	RESULTS	UNITS	SRL	TRIGGER	MCL	EXCEEDS Trigger?	EXCEEDS MCL?	Method/Analyst	
	EPA REGULATED									
4	Arsenic	0.007	mg/l	0.002	0.05	0.05	NO	NO	3113B	WMA
5	Barium	NA	mg/l	0.1	2	2			3113B	
6	Cadmium		mg/l	0.002	0.005	0.005			3113B	
7	Chromium		mg/l	0.01	0.1	0.1			3113B	
11	Mercury		mg/l	0.0005	0.002	0.002			3112B	
12	Selenium		mg/l	0.005	0.05	0.05			3113B	
110	Beryllium		mg/l	0.003	0.004	0.004			3113B	
111	Nickel		mg/l	0.04	0.1	0.1			3111B	
112	Antimony		mg/l	0.005	0.006	0.006			3113B	
113	Thallium		mg/l	0.002	0.002	0.002			200.9	
116	Cyanide		mg/l	0.05	0.2	0.2			4500-CNF	
19	Fluoride		mg/l	0.2	2	4			4110B	
114	Nitrite - N		mg/l	0.5	0.5	1			4110B	
20	Nitrate - N		mg/l	0.5	5	10			4110B	
161	Total Nitrate/Nitrite		mg/l	0.5	5	10			4110B	
	EPA REGULATED (Secondary)									
8	Iron	NA	mg/l	0.1	0.3	0.3			3111B	
10	Manganese		mg/l	0.01	0.05	0.05			3111B	
13	Silver		mg/l	0.01	0.1	0.1			3111B	
21	Chloride		mg/l	20	250	250			4110B	
22	Sulfate		mg/l	10	250	250			4110B	
24	Zinc		mg/l	0.2	5	5			3111B	
	STATE REGULATED									
14	Sodium	NA	mg/l	5					3111B	
15	Hardness		mg/l	10					2340C	
16	Conductivity		umhos/cm	10	700	700			2510B	
17	Turbidity		NTU	0.1	1				2130B	
18	Color		color units	5	15	15			2120B	
26	Total Dissolved Solids		mg/l	150	500	500			2540C	
	STATE UNREGULATED									
9	Lead	NA	mg/l	0.002					3113B	
23	Copper		mg/l	0.02					3111B	

COMMENTS: Arsenic

LAB USE ONLY: BAC ( ) VOC ( ) SOC ( ) MISC ( )

1986 * PROPERTY OF WATER MANAGEMENT LABORATORIES, INC.

Revised 2003

Please Print Pl y
USE HEAVY PEN

WATER MANAGEMENT LABORATORIES INC.

1515 80th St. E.
Tacoma, WA 98404
(253) 531-3121

TOM Fisher

SEE BACK FOR INSTRUCTIONS

INORGANIC CHEMICALS (IOCS) REPORT

System ID No: 315690	System Name: Harstene Point	
Lab/Sample No: 08904986	Date Collected: 7-27-05	DOH Source No: S01
Multiple Source Nos: N/A	Sample Type: A	Sample Purpose: C
Date Received: 7-28-05	Date Reported: 7-29-05	Supervisor: [illegible]
County: Mason	Date Digested: NA	Group: (A) B Other
Sample Location: Wellhouse #1		
Send Results & Bill To: Mason County Utilities + Waste Management P.O. Box 578 Shelton, WA 98584	Remarks: AM1306R	

DOH#	ANALYTES	RESULTS	UNITS	SRL	TRIGGER	MCL	EXCEEDS Trigger?	EXCEEDS MCL?	Method/Analyst	
	EPA REGULATED									
4	Arsenic	0.009	mg/l	0.002	0.05	0.05	NO	NO	3113B	TMB
5	Barium	NA	mg/l	0.1	2	2			3113B	
6	Cadmium		mg/l	0.002	0.005	0.005			3113B	
7	Chromium		mg/l	0.01	0.1	0.1			3113B	
11	Mercury		mg/l	0.0005	0.002	0.002			3112B	
12	Selenium		mg/l	0.005	0.05	0.05			3113B	
110	Beryllium		mg/l	0.003	0.004	0.004			3113B	
111	Nickel		mg/l	0.04	0.1	0.1			3111B	
112	Antimony		mg/l	0.005	0.006	0.006			3113B	
113	Thallium		mg/l	0.002	0.002	0.002			200.9	
116	Cyanide		mg/l	0.05	0.2	0.2			4500-CNF	
19	Fluoride		mg/l	0.2	2	4			4110B	
114	Nitrite - N		mg/l	0.5	0.5	1			4110B	
20	Nitrate - N		mg/l	0.5	5	10			4110B	
161	Total Nitrate/Nitrite		mg/l	0.5	5	10			4110B	
	EPA REGULATED (Secondary)									
8	Iron	NA	mg/l	0.1	0.3	0.3			3111B	
10	Manganese		mg/l	0.01	0.05	0.05			3111B	
13	Silver		mg/l	0.01	0.1	0.1			3111B	
21	Chloride		mg/l	20	250	250			4110B	
22	Sulfate		mg/l	10	250	250			4110B	
24	Zinc		mg/l	0.2	5	5			3111B	
	STATE REGULATED									
14	Sodium	NA	mg/l	5					3111B	
15	Hardness		mg/l	10					2340C	
16	Conductivity		umhos/cm	10	700	700			2510B	
17	Turbidity		NTU	0.1	1				2130B	
18	Color		color units	5	15	15			2120B	
26	Total Dissolved Solids		mg/l	150	500	500			2540C	
	STATE UNREGULATED									
9	Lead	NA	mg/l	0.002					3113B	
23	Copper		mg/l	0.02					3111B	

COMMENTS: Arsenic

LAB USE ONLY: BAC ( ) VOC ( ) SOC ( ) MISC ( )

1986 * PROPERTY OF WATER MANAGEMENT LABORATORIES, INC.

Please Print Plainly
USE HEAVY PEN
DO NOT WRITE IN SHADED AREAS

WATER MANAGEMENT LABORATORIES INC.
1515 80th St. E.
Tacoma, WA 98404
(253) 531-3121

SEE BACK FOR INSTRUCTIONS

INORGANIC CHEMICALS (IOCS) REPORT

System ID No: 315690 | System Name: Harstene Point
Lab/Sample No: 08918763 | Date Collected: 09-19-07 | DOH Source No: 502
Multiple Source Nos: N/A | Sample Type: A | Sample Purpose: C
Date Received: 09-20-07 | Date Reported: 09-22-07 | Supervisor: WMA
County: Mason | Date Digested: NA | Group: (A) B Other
Sample Location: Wellhouse - Well #2
Send Results & Bill To: Mason County Utilities | Remarks:
PO Box 578
Shelton WA 98584

DOH#	ANALYTES	RESULTS	UNITS	SRL	TRIGGER	MCL	EXCEEDS Trigger?	EXCEEDS MCL?	Method	Analyst
	EPA REGULATED									
4	Arsenic	0.030	mg/L	0.002	0.05	0.05	YES	YES	200.8	OMS
5	Barium	<0.1	mg/L	0.1	2	2	NO	NO	200.8	OMS
6	Cadmium	<0.002	mg/L	0.002	0.005	0.005			200.8	OMS
7	Chromium	<0.01	mg/L	0.01	0.1	0.1			200.8	OMS
11	Mercury	<0.0005	mg/L	0.0005	0.002	0.002			200.8	OMS
12	Selenium	<0.005	mg/L	0.005	0.05	0.05			200.8	OMS
110	Beryllium	<0.003	mg/L	0.003	0.004	0.004			200.8	OMS
111	Nickel	<0.04	mg/L	0.04	0.1	0.1			200.8	OMS
112	Antimony	<0.005	mg/L	0.005	0.006	0.006			200.8	OMS
113	Thallium	<0.002	mg/L	0.002	0.002	0.002			200.9	OMS
116	Cyanide	<0.05	mg/L	0.05	0.2	0.2			4500-CNF	RL
19	Fluoride	<0.2	mg/L	0.2	2	4			300.0	RL
114	Nitrite - N	<0.2	mg/L	0.5	0.5	1			300.0	RL
20	Nitrate - N	<0.2	mg/L	0.5	5	10			300.0	RL
161	Total Nitrate/Nitrite	<0.4	mg/L	0.5	5	10			300.0	RL
	EPA REGULATED (Secondary)									
8	Iron	<0.1	mg/L	0.1	0.3	0.3	NO	NO	3111B	OMS
10	Manganese	0.31	mg/L	0.01	0.05	0.05	YES	YES	200.8	OMS
13	Silver	<0.01	mg/L	0.01	0.1	0.1	NO	NO	200.8	OMS
21	Chloride	5	mg/L	20	250	250			300.0	RL
22	Sulfate	2	mg/L	10	250	250			300.0	RL
24	Zinc	<0.2	mg/L	0.2	5	5			200.8	OMS
	STATE REGULATED									
14	Sodium	11	mg/L	5					200.8	OMS
15	Hardness	101	mg/L	10					2340C	[illegible]
16	Conductivity	203	umhos/cm	10	700	700	NO	NO	2510B	RL
17	Turbidity	0.1	NTU	0.1	1		NO		2130B	RL
18	Color	<5.0	color units	5	15	15	NO	NO	2120B	RL
26	Total Dissolved Solids	NA	mg/L	150	500	500	—	—	2540C	—
	STATE UNREGULATED									
9	Lead	<0.002	mg/L	0.002					200.8	OMS
23	Copper	<0.02	mg/L	0.02					200.8	OMS

COMMENTS: FC-28

2006 © PROPERTY OF WATER MANAGEMENT LABORATORIES, INC.

Please Print Plainly
USE HEAVY PEN

WATER MANAGEMENT LABORATORIES inc
1515 Ninth St. E.
Tacoma, WA 98404
(253) 531-3121

SEE BACK FOR INSTRUCTIONS

INORGANIC CHEMICALS (IOCS) REPORT

System ID No: 3151690 System Name: Hoodsport Point
Lab/Sample No: 08020079 Date Collected: 11-26-07 DOH Source No: S02
Multiple Source Nos: N/A Sample Type: A Sample Purpose: C
Date Received: 11-27-07 Date Reported: 11-28-07 Supervisor: DMS
County: Mason Date Digested: N/A Group: (A) B Other
Sample Location: Filter Tap (WELL #2)
Send Results & Bill To: Mason Co. PUD #1
N 21971 Hwy 101
Shelton, WA 98584
Remarks: AM1762R

DOH#	ANALYTES	RESULTS	UNITS	SRL	TRIGGER	MCL	EXCEEDS Trigger?	EXCEEDS MCL?	Method/Analyst	
	EPA REGULATED									
4	Arsenic	0.0018	mg/l	0.002	0.01	0.01	NO	NO	3113B	DMS
5	Barium	N/A	mg/l	0.2	2	2			3113B	
6	Cadmium		mg/l	0.002	0.005	0.005			3113B	
7	Chromium		mg/l	0.02	0.1	0.1			3113B	
11	Mercury		mg/l	0.0005	0.002	0.002			3112B	
12	Selenium		mg/l	0.005	0.05	0.05			3113B	
110	Beryllium		mg/l	0.003	0.004	0.004			3113B	
111	Nickel		mg/l	0.04	0.1	0.1			3111B	
112	Antimony		mg/l	0.005	0.006	0.006			3113B	
113	Thallium		mg/l	0.002	0.002	0.002			200.9	
115	Cyanide		mg/l	0.05	0.2	0.2			4500-CN-E	
19	Fluoride		mg/l	0.2	2	4			4110B	
114	Nitrite - N		mg/l	0.5	0.5	1			4110B	
20	Nitrate - N		mg/l	0.5	5	10			4110B	
161	Total Nitrate/Nitrite		mg/l	0.5	5	10			4110B	
	EPA REGULATED (Secondary)									
8	Iron	N/A	mg/l	0.1	0.3	0.3			3111B	
10	Manganese		mg/l	0.01	0.05	0.05			3111B	
13	Silver		mg/l	0.01	0.1	0.1			3113B	
21	Chloride		mg/l	20	250	250			4110B	
22	Sulfate		mg/l	10	250	250			4110B	
24	Zinc		mg/l	0.2	5	5			3111B	
	STATE REGULATED									
14	Sodium	N/A	mg/l	5					3111B	
15	Hardness		mg/l	10					2340C	
16	Conductivity		umhos/cm	10	700	700			2510B	
17	Turbidity		NTU	0.1	1				2130B	
18	Color		color units	5	15	15			2120B	
26	Total Dissolved Solids		mg/l	150	500	500			2540C	
	STATE UNREGULATED									
9	Lead	N/A	mg/l	0.002					3113B	
23	Copper		mg/l	0.02					3111B	

COMMENTS: Arsenic

LAB USE ONLY: BAC ( ) VOC ( ) SOC ( ) MISC ( )

USE * PROPERTY OF WATER MANAGEMENT LABORATORIES, INC Revised 2003

Washington State Public Health Laboratory
1610 NE 150th Street, Shoreline WA. 98155-9701
Phone (206) 418-5486 FAX (206) 418-5465

RADIONUCLIDE ANALYSES REPORT

System ID No.: 315690	System Name: Harstene Point	
Lab/Sample No: 023613339	Date Collected: 10/24/05 15:00	DOH Source No: S01
Multiple Source Nos:	Sample Type: B	Sample Purpose: C
Date Received: 10/27/05	Date Reported: 11/22/06	Supervisor: [illegible]
	Date Analyzed: 10/12/06	Analyst: SEO
County: Mason	Group: A	
Sample Location: Well #1		

Send Report To: Mason County Utilities, Attn: Tom Moore P.O. Box 578 Shelton, WA 98584	Bill To: Mason County Utilities P.O. Box 578 Shelton, WA 98584

DOH #	ANALYTES	LAB MDA	RESULTS	UNITS	DATE ANALYZED	MCL	ANALYST'S INITIALS & METHOD USED
EPA/STATE REGULATED (These analyses should be performed in order as listed)							
165	Gross Alpha			pCi/L		--	
166	Radium 228	0.9	ND	pCi/L	10/12/06		SEO/3M DISK
*Determine Radium 226 activity if Gross Alpha is greater than 5.0 pCi/L**							
39	Radium 226*			pCi/L		--	
*Determine Uranium activity if Gross Alpha is greater than 15.0 pCi/L **							
105	Uranium** (mass)			µg/L		30	
105	Uranium** (activity)			pCi/L		20**	
Depending on the foregoing data determine the following (must be completed if data is available):							
40	Radium 226 + 228			pCi/L		5	
40	Gross Alpha*** + Radium 228			pCi/L		5	
41	Gross Alpha minus Uranium			pCi/L		15	
Do the following only if specifically requested by the client or the state							
42	Gross Beta****			pCi/L		50	
43	Tritium****			pCi/L		20,000	
44	Strontium 90****			pCi/L		8	
107	Cesium 134****			pCi/L		***	
108	Iodine 131****			pCi/L		***	

Comments:

MCL (Maximum Contaminant Level): If the contaminant amount exceeds the MCL, immediately contact your regional DOH office.
MDA: Minimum Detectable Amount.
NA (Not Analyzed): use in the results column for compounds not included in the current analysis.
ND (Not Detected): use in the results column for compounds analyzed and not detected at a level greater than or equal to the MDA.
*** If Gross Alpha is less than , or equal to, 5 pCi/L,** it may be assumed that the Alpha activity is entirely due to Radium 226 (i.e., Radium 226 would not need to be run). The Alpha activity is then added to the Radium 228 activity (i.e., Beta activity) for MCL determinations. If the sum of the Alpha activity plus the Radium 228 activity is greater than 5 pCi/L, Radium 226 activity must then be determined for water system compliance purposes (i.e., Radium 226 + Radium 228 activity)
****Uranium's MCL is given in mass terms (µg/L).** When Uranium is determined by mass methods, it must be converted to activity levels (pCi/L) for calculation of the MCL (Gross Alpha less Uranium). A conversion factor of 0.67 pCi/l per µg/L should be used. Uranium needs to be determined only when the Gross Alpha exceeds 15 pCi/L.
*** Use Gross Alpha in lieu of Radium 226 when the Gross Alpha is less than, or equal to, 5.0 pCi/L
****** The MCL for beta particle and photon radioactivity from man-made radionuclides** is the average annual concentration which shall not produce an annual dose equivalent to the total body or any internal organ greater than four millirem/yr.

Charge Amount: $78.00

Washington State Public Health Laboratory
1610 NE 150th Street, Shoreline WA. 98155-9701
Phone (206) 418-5486 FAX (206) 418-5465

RADIONUCLIDE ANALYSES REPORT

System ID No.: 315690	System Name: Harstene Point	
Lab/Sample No: 023613328	Date Collected: 10/24/05 15:15	DOH Source No: S02
Multiple Source Nos:	Sample Type: B	Sample Purpose: C
Date Received: 10/27/05	Date Reported: 11/17/06	Supervisor: [illegible]
	Date Analyzed: 10/11/06	Analyst: SEO
County: Mason	Group: A	
Sample Location: Well #2		
Send Report To: Mason County Utilities Attn: Tom Moore P.O. Box 578 Shelton, WA 98584	Bill To: Mason County Utilities P.O. Box 578 Shelton, WA 98584	

DOH #	ANALYTES	LAB MDA	RESULTS	UNITS	DATE ANALYZED	MCL	ANALYST'S INITIALS & METHOD USED
	EPA/STATE REGULATED (These analyses should be performed in order as listed)-						
165	Gross Alpha			pCi/L		--	
166	Radium 228	0.7	ND	pCi/L	10/11/06		SEO/3M DISK
	*Determine Radium 226 activity if Gross Alpha is greater than 5.0 pCi/L**						
39	Radium 226*			pCi/L		--	
	*Determine Uranium activity if Gross Alpha is greater than 15.0 pCi/L *****						
105	Uranium** (mass)			µg/L		30	
105	Uranium** (activity)			pCi/L		20**	
	Depending on the foregoing data determine the following (must be completed if data is available):						
40	Radium 226 + 228			pCi/L		5	
40	Gross Alpha*** + Radium 228			pCi/L		5	
41	Gross Alpha minus Uranium			pCi/L		15	
	Do the following only if specifically requested by the client or the state						
42	Gross Beta****			pCi/L		50	
43	Tritium****			pCi/L		20,000	
44	Strontium 90****			pCi/L		8	
107	Cesium 134****			pCi/L		***	
108	Iodine 131****			pCi/L		***	

Comments:

MCL (Maximum Contaminant Level): If the contaminant amount exceeds the MCL, immediately contact your regional DOH office.
MDA: Minimum Detectable Amount.
NA (Not Analyzed): use in the results column for compounds not included in the current analysis.
ND (Not Detected): use in the results column for compounds analyzed and not detected at a level greater than or equal to the MDA.
* **If Gross Alpha is less than , or equal to, 5 pCi/L,** it may be assumed that the Alpha activity is entirely due to Radium 226 (i.e., Radium 226 would not need to be run). The Alpha activity is then added to the Radium 228 activity (i.e., Beta activity) for MCL determinations. If the sum of the Alpha activity plus the Radium 228 activity is greater than 5 pCi/L, Radium 226 activity must then be determined for water system compliance purposes (i.e., Radium 226 + Radium 228 activity)
****Uranium's MCL is given in mass terms (µg/L).** When Uranium is determined by mass methods, it must be converted to activity levels (pCi/L) for calculation of the MCL (Gross Alpha less Uranium). A conversion factor of 0.67 pCi/l per µg/L should be used. Uranium needs to be determined only when the Gross Alpha exceeds 15 pCi/L.
*** Use Gross Alpha in lieu of Radium 226 when the Gross Alpha is less than, or equal to, 5.0 pCi/L
**** **The MCL for beta particle and photon radioactivity from man-made radionuclides** is the average annual concentration which shall not produce an annual dose equivalent to the total body or any internal organ greater than four millirem/yr.

Charge Amount: $78.00

Washington State Public Health Laboratory
1610 NE 150th Street, Shoreline WA. 98155-9701
Phone (206) 361-2896 FAX (206) 361-2899

RADIONUCLIDE ANALYSES REPORT

System ID No.: 31569D	System Name: Hartstene Pointe	
Lab/Sample No: 023610140	Date Collected: 6/11/03 14:15	DOH Source No: S01
Multiple Source Nos:	Sample Type: B	Sample Purpose: C
Date Received: 6/16/03	Date Reported: 9/16/03	Supervisor: JFR / JAM
	Date Analyzed: 08/12/03	Analyst: JFR
County: Mason	Group: A	
Sample Location: Well Head #1		
Send Report To: Tom Moore, Mason County P.O. Box 578 Shelton, WA 98584	Bill To: Department of Utilities P.O. Box 578 Shelton, WA 98584	

DOH #	ANALYTES	LAB MDA	RESULTS	UNITS	DATE ANALYZED	MCL	ANALYST/METHOD
			EPA REGULATED				
39	Radium 226			pCi/l		3	
40	Radium 226 + 228			pCi/l		5	
41	Gross Alpha	2	ND	pCi/l	08/12/03	15*	JFR/EPA 900.0
42	Gross Beta			pCi/l		50	
43	Tritium			pCi/l		20000	
44	Strontium 90			pCi/l		8	
107	Cesium 134			pCi/l		**	
108	Iodine 131			pCi/l		**	
			EPA UNREGULATED				
105	Uranium			pCi/l			
109	Radon			pCi/l			

NOTES:

MCL: Maximum Contaminant Level. If the contaminant amount exceeds the MCL, immediately contact your regional DOH office.

MDA: Minimum Detectable Amount.

NA (Not Analyzed) indicates this analyte was not included in the current analysis.

ND (Not Detected) indicates this analyte was analyzed and not detected at a level greater than or equal to the MDA.

* Excluding Uranium

** The MCL for beta particle and photon radioactivity from man-made radionuclides is the average annual concentration which shall not produce an annual dose equivalent to the total body or any internal organ greater than four milli-rem/yr.

Comments

Charge Amount: $57.00

Washington State Public Health Laboratory
1610 NE 150th Street, Shoreline WA. 98155-9701
Phone (206) 361-2896 FAX (206) 361-2899

RADIONUCLIDE ANALYSES REPORT

System ID No.: 31569D	System Name: Hartstene Pointe	
Lab/Sample No: 023610139	Date Collected: 6/11/03 14:30	DOH Source No: S02
Multiple Source Nos:	Sample Type: B	Sample Purpose: C
Date Received: 6/16/03	Date Reported: 9/16/03	Supervisor: JFR / JAM
	Date Analyzed: 08/12/03	Analyst: JFR
County: Mason	Group: A	
Sample Location: Well head #2		
Send Report To: Tom Moore, Mason County P.O. Box 578 Shelton, WA 98584	Bill To: Department of Utilities P.O. Box 578 Shelton, WA 98584	

DOH #	ANALYTES	LAB MDA	RESULTS	UNITS	DATE ANALYZED	MCL	ANALYST/METHOD
			EPA REGULATED				
39	Radium 226			pCi/l		3	
40	Radium 226 + 228			pCi/l		5	
41	Gross Alpha	2	ND	pCi/l	08/12/03	15*	JFR/EPA 900.0
42	Gross Beta			pCi/l		50	
43	Tritium			pCi/l		20000	
44	Strontium 90			pCi/l		8	
107	Cesium 134			pCi/l		**	
108	Iodine 131			pCi/l		**	
			EPA UNREGULATED				
105	Uranium			pCi/l			
109	Radon			pCi/l			

NOTES:
MCL: Maximum Contaminant Level. If the contaminant amount exceeds the MCL, immediately contact your regional DOH office.
MDA: Minimum Detectable Amount.
NA (Not Analyzed) indicates this analyte was not included in the current analysis.
ND (Not Detected) indicates this analyte was analyzed and not detected at a level greater than or equal to the MDA.
* Excluding Uranium
** The MCL for beta particle and photon radioactivity from man-made radionuclides is the average annual concentration which shall not produce an annual dose equivalent to the total body or any internal organ greater than four milli-rem/yr.

Comments

Charge Amount: $57.00

Washington State Public Health Laboratory
1610 NE 150th Street, Shoreline WA. 98155-9701
Phone (206) 361-2896 FAX (206) 361-2899

RADIONUCLIDE ANALYSES REPORT

System ID No.: 31569D	System Name: Hartstene Pointe	
Lab/Sample No: 023610140	Date Collected: 6/11/03 14:15	DOH Source No: S01
Multiple Source Nos:	Sample Type: B	Sample Purpose: C
Date Received: 6/16/03	Date Reported: 9/16/03	Supervisor: JR / JAM
	Date Analyzed: 08/12/03	Analyst: JFR
County: Mason	Group: A	
Sample Location: Well Head #1		
Send Report To: Tom Moore, Mason County P.O. Box 578 Shelton, WA 98584	Bill To: Department of Utilities P.O. Box 578 Shelton, WA 98584	

DOH #	ANALYTES	LAB MDA	RESULTS	UNITS	DATE ANALYZED	MCL	ANALYST/METHOD
			EPA REGULATED				
39	Radium 226			pCi/l		3	
40	Radium 226 + 228			pCi/l		5	
41	Gross Alpha	2	ND	pCi/l	08/12/03	15*	JFR/EPA 900.0
42	Gross Beta			pCi/l		50	
43	Tritium			pCi/l		20000	
44	Strontium 90			pCi/l		8	
107	Cesium 134			pCi/l		**	
108	Iodine 131			pCi/l		**	
			EPA UNREGULATED				
105	Uranium			pCi/l			
109	Radon			pCi/l			

NOTES:
MCL: Maximum Contaminant Level. If the contaminant amount exceeds the MCL, immediately contact your regional DOH office.
MDA: Minimum Detectable Amount.
NA (Not Analyzed) indicates this analyte was not included in the current analysis.
ND (Not Detected) indicates this analyte was analyzed and not detected at a level greater than or equal to the MDA.
* Excluding Uranium
** The MCL for beta particle and photon radioactivity from man-made radionuclides is the average annual concentration which shall not produce an annual dose equivalent to the total body or any internal organ greater than four milli-rem/yr.

Comments

Charge Amount: $57.00

Washington State Public Health Laboratory
1610 NE 150th Street, Shoreline WA. 98155-9701
Phone (206) 361-2896 FAX (206) 361-2899

RADIONUCLIDE ANALYSES REPORT

System ID No.: 31569D	System Name: Hartstene Pointe	
Lab/Sample No: 023610139	Date Collected: 6/11/03 14:30	DOH Source No: S02
Multiple Source Nos:	Sample Type: B	Sample Purpose: C
Date Received: 6/16/03	Date Reported: 9/16/03	Supervisor: JFR/JAM
	Date Analyzed: 08/12/03	Analyst: JFR
County: Mason	Group: A	
Sample Location: Well head #2		
Send Report To: Tom Moore, Mason County P.O. Box 578 Shelton, WA 98584	Bill To: Department of Utilities P.O. Box 578 Shelton, WA 98584	

DOH #	ANALYTES	LAB MDA	RESULTS	UNITS	DATE ANALYZED	MCL	ANALYST/METHOD
			EPA REGULATED				
39	Radium 226			pCi/l		3	
40	Radium 226 + 228			pCi/l		5	
41	Gross Alpha	2	ND	pCi/l	08/12/03	15*	JFR/EPA 900.0
42	Gross Beta			pCi/l		50	
43	Tritium			pCi/l		20000	
44	Strontium 90			pCi/l		8	
107	Cesium 134			pCi/l		**	
108	Iodine 131			pCi/l		**	
			EPA UNREGULATED				
105	Uranium			pCi/l			
109	Radon			pCi/l			

NOTES:
MCL: Maximum Contaminant Level. If the contaminant amount exceeds the MCL, immediately contact your regional DOH office.
MDA: Minimum Detectable Amount.
NA (Not Analyzed) indicates this analyte was not included in the current analysis.
ND (Not Detected) indicates this analyte was analyzed and not detected at a level greater than or equal to the MDA.
* Excluding Uranium
** The MCL for beta particle and photon radioactivity from man-made radionuclides is the average annual concentration which shall not produce an annual dose equivalent to the total body or any internal organ greater than four milli-rem/yr.

Comments

Charge Amount: $57.00

Washington State Public Health Laboratory
1610 NE 150th Street, Shoreline WA. 98155-9701
Phone (206) 418-5486 FAX (206) 418-5465

RADIONUCLIDE ANALYSES REPORT

System ID No.: 315690	System Name: Harstene Point	
Lab/Sample No: 023612294	Date Collected: 04/11/05 15:30	DOH Source No: S01
Multiple Source Nos:	Sample Type: B	Sample Purpose: C
Date Received: 04/13/05	Date Reported: 12/15/05	Supervisor: [illegible]
	Date Analyzed: 12/4/05	Analyst: MAT
County: Mason	Group: A	
Sample Location: Well #1, Well Head		
Send Report To: Mason County Utilities & Waste Attn: Tom Moore P.O. Box 578 Shelton, WA 98584	Bill To: Mason County Utilities & Waste Management P.O. Box 578 Shelton, WA 98584	

DOH #	ANALYTES	LAB MDA	RESULTS	UNITS	DATE ANALYZED	MCL	ANALYST'S INITIALS & METHOD USED
EPA/STATE REGULATED (These analyses should be performed in order as listed)							
165	Gross Alpha			pCi/L		--	
166	Radium 228	0.9	ND	pCi/L	12/4/05		MAT/3M DISK
*Determine Radium 226 activity if Gross Alpha is greater than 5.0 pCi/L**							
39	Radium 226*			pCi/L		--	
*Determine Uranium activity if Gross Alpha is greater than 15.0 pCi/L **							
105	Uranium** (mass)			µg/L		30	
105	Uranium** (activity)			pCi/L		20**	
Depending on the foregoing data determine the following (must be completed if data is available):							
40	Radium 226 + 228			pCi/L		5	
40	Gross Alpha*** + Radium 228			pCi/L		5	
41	Gross Alpha minus Uranium			pCi/L		15	
Do the following only if specifically requested by the client or the state							
42	Gross Beta****			pCi/L		50	
43	Tritium****			pCi/L		20,000	
44	Strontium 90****			pCi/L		8	
107	Cesium 134****			pCi/L		***	
108	Iodine 131****			pCi/L		***	

Comments:

MCL (Maximum Contaminant Level): If the contaminant amount exceeds the MCL, immediately contact your regional DOH office.
MDA: Minimum Detectable Amount.
NA (Not Analyzed): use in the results column for compounds not included in the current analysis.
ND (Not Detected): use in the results column for compounds analyzed and not detected at a level greater than or equal to the MDA.
* **If Gross Alpha is less than , or equal to, 5 pCi/L**, it may be assumed that the Alpha activity is entirely due to Radium 226 (i.e., Radium 226 would not need to be run). The Alpha activity is then added to the Radium 228 activity (i.e., Beta activity) for MCL determinations. If the sum of the Alpha activity plus the Radium 228 activity is greater than 5 pCi/L, Radium 226 activity must then be determined for water system compliance purposes (i.e., Radium 226 + Radium 228 activity)
****Uranium's MCL is given in mass terms (µg/L).** When Uranium is determined by mass methods, it must be converted to activity levels (pCi/L) for calculation of the MCL (Gross Alpha less Uranium). A conversion factor of 0.67 pCi/l per µg/L should be used. Uranium needs to be determined only when the Gross Alpha exceeds 15 pCi/L.
*** Use Gross Alpha in lieu of Radium 226 when the Gross Alpha is less than, or equal to, 5.0 pCi/L
**** **The MCL for beta particle and photon radioactivity from man-made radionuclides** is the average annual concentration which shall not produce an annual dose equivalent to the total body or any internal organ greater than four millirem/yr.

Charge Amount: $78.00

Washington State Public Health Laboratory
1610 NE 150th Street, Shoreline WA. 98155-9701
Phone (206) 418-5486 FAX (206) 418-5465

RADIONUCLIDE ANALYSES REPORT

System ID No.: 315690	System Name: Harstene Point	
Lab/Sample No: 023612598	Date Collected: 05/16/05 15:30	DOH Source No: S02
Multiple Source Nos:	Sample Type: B	Sample Purpose: C
Date Received: 05/18/05	Date Reported: 4/25/06	Supervisor: JBR / [illegible]
	Date Analyzed: 3/13/2006	Analyst: SEO
County: Mason	Group: A	
Sample Location: Well #2		
Send Report To: Mason County Utilities & Waste P.O. Box 578 Shelton, WA 98584	Bill To: Mason County Utilities & Waste P.O. Box 578 Shelton, WA 98584	

RECEIVED
APR 27 2006
MASON CO. U[illegible]

DOH #	ANALYTES	LAB MDA	RESULTS	UNITS	DATE ANALYZED	MCL	ANALYST'S INITIALS & METHOD USED
	EPA/STATE REGULATED (These analyses should be performed in order as listed)						
165	Gross Alpha			pCi/L		--	
166	Radium 228	1	ND	pCi/L	3/13/2006		SEO/3M DISK
	*Determine Radium 226 activity if Gross Alpha is greater than 5.0 pCi/L**						
39	Radium 226*			pCi/L		--	
	*Determine Uranium activity if Gross Alpha is greater than 15.0 pCi/L *****						
105	Uranium** (mass)			µg/L		30	
105	Uranium** (activity)			pCi/L		20**	
	Depending on the foregoing data determine the following (must be completed if data is available):						
40	Radium 226 + 228			pCi/L		5	
40	Gross Alpha*** + Radium 228			pCi/L		5	
41	Gross Alpha minus Uranium			pCi/L		15	
	Do the following only if specifically requested by the client or the state						
42	Gross Beta****			pCi/L		50	
43	Tritium****			pCi/L		20,000	
44	Strontium 90****			pCi/L		8	
107	Cesium 134****			pCi/L		***	
108	Iodine 131****			pCi/L		***	

Comments:

MCL (Maximum Contaminant Level): If the contaminant amount exceeds the MCL, immediately contact your regional DOH office.
MDA: Minimum Detectable Amount.
NA (Not Analyzed): use in the results column for compounds not included in the current analysis.
ND (Not Detected): use in the results column for compounds analyzed and not detected at a level greater than or equal to the MDA.
*** If Gross Alpha is less than , or equal to, 5 pCi/L,** it may be assumed that the Alpha activity is entirely due to Radium 226 (i.e., Radium 226 would not need to be run). The Alpha activity is then added to the Radium 228 activity (i.e., Beta activity) for MCL determinations. If the sum of the Alpha activity plus the Radium 228 activity is greater than 5 pCi/L, Radium 226 activity must then be determined for water system compliance purposes (i.e., Radium 226 + Radium 228 activity)
****Uranium's MCL is given in mass terms (µg/L).** When Uranium is determined by mass methods, it must be converted to activity levels (pCi/L) for calculation of the MCL (Gross Alpha less Uranium). A conversion factor of 0.67 pCi/l per µg/L should be used. Uranium needs to be determined only when the Gross Alpha exceeds 15 pCi/L.
*** Use Gross Alpha in lieu of Radium 226 when the Gross Alpha is less than, or equal to, 5.0 pCi/L
****** The MCL for beta particle and photon radioactivity from man-made radionuclides** is the average annual concentration which shall not produce an annual dose equivalent to the total body or any internal organ greater than four millirem/yr.

Charge Amount: $78.00

Washington State Public Health Laboratory
1610 NE 150th Street, Shoreline WA. 98155-9701
Phone (206) 418-5486 FAX (206) 418-5465

RADIONUCLIDE ANALYSES REPORT

System ID No.: 315690	System Name: Harstene Point	
Lab/Sample No: 023612598	Date Collected: 05/16/05 15:30	DOH Source No: S02
Multiple Source Nos:	Sample Type: B	Sample Purpose: C
Date Received: 05/18/05	Date Reported: 4/25/06	Supervisor: PBR/JCM
	Date Analyzed: 3/13/2006	Analyst: SEO
County: Mason	Group: A	
Sample Location: Well #2		
Send Report To: Mason County Utilities & Waste P.O. Box 578 Shelton, WA 98584	Bill To: Mason County Utilities & Waste P.O. Box 578 Shelton, WA 98584	

RECEIVED
APR 27 2006
MASON CO. U...

DOH #	ANALYTES	LAB MDA	RESULTS	UNITS	DATE ANALYZED	MCL	ANALYST'S INITIALS & METHOD USED
	EPA/STATE REGULATED (These analyses should be performed in order as listed)						
165	Gross Alpha			pCi/L		--	
166	Radium 228	1	ND	pCi/L	3/13/2006		SEO/3M DISK
	*Determine Radium 226 activity if Gross Alpha is greater than 5.0 pCi/L**						
39	Radium 226*			pCi/L		--	
	*Determine Uranium activity if Gross Alpha is greater than 15.0 pCi/L ***						
105	Uranium** (mass)			µg/L		30	
105	Uranium** (activity)			pCi/L		20**	
	Depending on the foregoing data determine the following (must be completed if data is available):						
40	Radium 226 + 228			pCi/L		5	
40	Gross Alpha*** + Radium 228			pCi/L		5	
41	Gross Alpha minus Uranium			pCi/L		15	
	Do the following only if specifically requested by the client or the state						
42	Gross Beta****			pCi/L		50	
43	Tritium****			pCi/L		20,000	
44	Strontium 90****			pCi/L		8	
107	Cesium 134****			pCi/L		***	
108	Iodine 131****			pCi/L		***	

Comments:

MCL (Maximum Contaminant Level): If the contaminant amount exceeds the MCL, immediately contact your regional DOH office.
MDA: Minimum Detectable Amount.
NA (Not Analyzed): use in the results column for compounds not included in the current analysis.
ND (Not Detected): use in the results column for compounds analyzed and not detected at a level greater than or equal to the MDA.
*** If Gross Alpha is less than , or equal to, 5 pCi/L,** it may be assumed that the Alpha activity is entirely due to Radium 226 (i.e., Radium 226 would not need to be run). The Alpha activity is then added to the Radium 228 activity (i.e., Beta activity) for MCL determinations. If the sum of the Alpha activity plus the Radium 228 activity is greater than 5 pCi/L, Radium 226 activity must then be determined for water system compliance purposes (i.e., Radium 226 + Radium 228 activity)
****Uranium's MCL is given in mass terms (µg/L).** When Uranium is determined by mass methods, it must be converted to activity levels (pCi/L) for calculation of the MCL (Gross Alpha less Uranium). A conversion factor of 0.67 pCi/l per µg/L should be used. Uranium needs to be determined only when the Gross Alpha exceeds 15 pCi/L.
*** Use Gross Alpha in lieu of Radium 226 when the Gross Alpha is less than, or equal to, 5.0 pCi/L
****** The MCL for beta particle and photon radioactivity from man-made radionuclides** is the average annual concentration which shall not produce an annual dose equivalent to the total body or any internal organ greater than four millirem/yr.

Charge Amount: $78.00

Washington State Public Health Laboratory
1610 NE 150th Street, Shoreline WA. 98155-9701
Phone (206) 418-5486 FAX (206) 418-5465

RADIONUCLIDE ANALYSES REPORT

System ID No.: 75027N	System Name: Rustlewood Water	
Lab/Sample No: 023612596	Date Collected: 05/16/05 15:30	DOH Source No: S02
Multiple Source Nos:	Sample Type: B	Sample Purpose: C
Date Received: 05/18/05	Date Reported: 4/25/06	Supervisor: JBR / JCM
	Date Analyzed: 3/8/2006	Analyst: SEO
County: Mason		Group: A
Sample Location: Well #2 sample head		
Send Report To: Tom Moore P.O. Box 578 Shelton, WA 98584	Bill To: Mason County Utilities P.O. Box 578 Shelton, WA 98584	

DOH #	ANALYTES	LAB MDA	RESULTS	UNITS	DATE ANALYZED	MCL	ANALYST'S INITIALS & METHOD USED
	EPA/STATE REGULATED (These analyses should be performed in order as listed)						
165	Gross Alpha			pCi/L		--	
166	Radium 228	1	ND	pCi/L	3/8/2006		SEO/3M DISK
	*Determine Radium 226 activity if Gross Alpha is greater than 5.0 pCi/L**						
39	Radium 226*			pCi/L		--	
	*Determine Uranium activity if Gross Alpha is greater than 15.0 pCi/L ***						
105	Uranium** (mass)			µg/L		30	
105	Uranium** (activity)			pCi/L		20**	
	Depending on the foregoing data determine the following (must be completed if data is available):						
40	Radium 226 + 228			pCi/L		5	
40	Gross Alpha*** + Radium 228			pCi/L		5	
41	Gross Alpha minus Uranium			pCi/L		15	
	Do the following only if specifically requested by the client or the state						
42	Gross Beta****			pCi/L		50	
43	Tritium****			pCi/L		20,000	
44	Strontium 90****			pCi/L		8	
107	Cesium 134****			pCi/L		***	
108	Iodine 131****			pCi/L		***	

Comments:

MCL (Maximum Contaminant Level): If the contaminant amount exceeds the MCL, immediately contact your regional DOH office.
MDA: Minimum Detectable Amount.
NA (Not Analyzed): use in the results column for compounds not included in the current analysis.
ND (Not Detected): use in the results column for compounds analyzed and not detected at a level greater than or equal to the MDA.
* **If Gross Alpha is less than , or equal to, 5 pCi/L,** it may be assumed that the Alpha activity is entirely due to Radium 226 (i.e., Radium 226 would not need to be run). The Alpha activity is then added to the Radium 228 activity (i.e., Beta activity) for MCL determinations. If the sum of the Alpha activity plus the Radium 228 activity is greater than 5 pCi/L, Radium 226 activity must then be determined for water system compliance purposes (i.e., Radium 226 + Radium 228 activity)
****Uranium's MCL is given in mass terms (µg/L).** When Uranium is determined by mass methods, it must be converted to activity levels (pCi/L) for calculation of the MCL (Gross Alpha less Uranium). A conversion factor of 0.67 pCi/l per µg/L should be used. Uranium needs to be determined only when the Gross Alpha exceeds 15 pCi/L.
*** Use Gross Alpha in lieu of Radium 226 when the Gross Alpha is less than, or equal to, 5.0 pCi/L
**** **The MCL for beta particle and photon radioactivity from man-made radionuclides** is the average annual concentration which shall not produce an annual dose equivalent to the total body or any internal organ greater than four millirem/yr.
Charge Amount: $78.00

Washington State Public Health Laboratory
1610 NE 150th Street, Shoreline WA. 98155-9701
Phone (206) 361-2896 FAX (206) 361-2899

RADIONUCLIDE ANALYSES REPORT

System ID No.: 31569D	System Name: Hartstene Pointe	
Lab/Sample No: 023610140	Date Collected: 6/11/03 14:15	DOH Source No: S01
Multiple Source Nos:	Sample Type: B	Sample Purpose: C
Date Received: 6/16/03	Date Reported: 9/16/03	Supervisor: JFR / JAM
	Date Analyzed: 08/12/03	Analyst: JFR
County: Mason	Group: A	
Sample Location: Well Head #1		
Send Report To: Tom Moore, Mason County P.O. Box 578 Shelton, WA 98584	Bill To: Department of Utilities P.O. Box 578 Shelton, WA 98584	

DOH #	ANALYTES	LAB MDA	RESULTS	UNITS	DATE ANALYZED	MCL	ANALYST/METHOD
			EPA REGULATED				
39	Radium 226			pCi/l		3	
40	Radium 226 + 228			pCi/l		5	
41	Gross Alpha	2	ND	pCi/l	08/12/03	15*	JFR/EPA 900.0
42	Gross Beta			pCi/l		50	
43	Tritium			pCi/l		20000	
44	Strontium 90			pCi/l		8	
107	Cesium 134			pCi/l		**	
108	Iodine 131			pCi/l		**	
			EPA UNREGULATED				
105	Uranium			pCi/l			
109	Radon			pCi/l			

NOTES:
MCL: Maximum Contaminant Level. If the contaminant amount exceeds the MCL, immediately contact your regional DOH office.
MDA: Minimum Detectable Amount.
NA (Not Analyzed) indicates this analyte was not included in the current analysis.
ND (Not Detected) indicates this analyte was analyzed and not detected at a level greater than or equal to the MDA.
* Excluding Uranium
** The MCL for beta particle and photon radioactivity from man-made radionuclides is the average annual concentration which shall not produce an annual dose equivalent to the total body or any internal organ greater than four milli-rem/yr.

Comments

Charge Amount: $57.00

Washington State Public Health Laboratory
1610 NE 150th Street, Shoreline WA. 98155-9701
Phone (206) 361-2896 FAX (206) 361-2899

RADIONUCLIDE ANALYSES REPORT

System ID No.: 31569D	System Name: Hartstene Pointe	
Lab/Sample No: 023610139	Date Collected: 6/11/03 14:30	DOH Source No: S02
Multiple Source Nos:	Sample Type: B	Sample Purpose: C
Date Received: 6/16/03	Date Reported: 9/16/03	Supervisor: GAR / JCM
	Date Analyzed: 08/12/03	Analyst: JFR
County: Mason	Group: A	
Sample Location: Well head #2		
Send Report To: Tom Moore, Mason County P.O. Box 578 Shelton, WA 98584	Bill To: Department of Utilities P.O. Box 578 Shelton, WA 98584	

DOH #	ANALYTES	LAB MDA	RESULTS	UNITS	DATE ANALYZED	MCL	ANALYST/METHOD
			EPA REGULATED				
39	Radium 226			pCi/l		3	
40	Radium 226 + 228			pCi/l		5	
41	Gross Alpha	2	ND	pCi/l	08/12/03	15*	JFR/EPA 900.0
42	Gross Beta			pCi/l		50	
43	Tritium			pCi/l		20000	
44	Strontium 90			pCi/l		8	
107	Cesium 134			pCi/l		**	
108	Iodine 131			pCi/l		**	
			EPA UNREGULATED				
105	Uranium			pCi/l			
109	Radon			pCi/l			

NOTES:
MCL: Maximum Contaminant Level. If the contaminant amount exceeds the MCL, immediately contact your regional DOH office.
MDA: Minimum Detectable Amount.
NA (Not Analyzed) indicates this analyte was not included in the current analysis.
ND (Not Detected) indicates this analyte was analyzed and not detected at a level greater than or equal to the MDA.
* Excluding Uranium
** The MCL for beta particle and photon radioactivity from man-made radionuclides is the average annual concentration which shall not produce an annual dose equivalent to the total body or any internal organ greater than four milli-rem/yr.

Comments

Charge Amount: $57.00

Washington State Public Health Laboratory
1610 NE 150th Street, Shoreline WA. 98155-9701
Phone (206) 418-5486 FAX (206) 418-5465

RADIONUCLIDE ANALYSES REPORT

System ID No.: 315690	System Name: Harstene Point	
Lab/Sample No: 023612294	Date Collected: 04/11/05 15:30	DOH Source No: S01
Multiple Source Nos:	Sample Type: B	Sample Purpose: C
Date Received: 04/13/05	Date Reported: 12/15/05	Supervisor: SHR / JCM
	Date Analyzed: 12/4/05	Analyst: MAT
County: Mason	Group: A	
Sample Location: Well #1, Well Head		
Send Report To: Mason County Utilities & Waste Attn: Tom Moore P.O. Box 578 Shelton, WA 98584	Bill To: Mason County Utilities & Waste Management P.O. Box 578 Shelton, WA 98584	

DOH #	ANALYTES	LAB MDA	RESULTS	UNITS	DATE ANALYZED	MCL	ANALYST'S INITIALS & METHOD USED
	EPA/STATE REGULATED (These analyses should be performed in order as listed)						
165	Gross Alpha			pCi/L		--	
166	Radium 228	0.9	ND	pCi/L	12/4/05		MAT/3M DISK
	*Determine Radium 226 activity if Gross Alpha is greater than 5.0 pCi/L**						
39	Radium 226*			pCi/L		--	
	*Determine Uranium activity if Gross Alpha is greater than 15.0 pCi/L ***						
105	Uranium** (mass)			µg/L		30	
105	Uranium** (activity)			pCi/L		20**	
	Depending on the foregoing data determine the following (must be completed if data is available):						
40	Radium 226 + 228			pCi/L		5	
40	Gross Alpha*** + Radium 228			pCi/L		5	
41	Gross Alpha minus Uranium			pCi/L		15	
	Do the following only if specifically requested by the client or the state						
42	Gross Beta****			pCi/L		50	
43	Tritium****			pCi/L		20,000	
44	Strontium 90****			pCi/L		8	
107	Cesium 134****			pCi/L		***	
108	Iodine 131****			pCi/L		***	

Comments:

MCL (Maximum Contaminant Level): If the contaminant amount exceeds the MCL, immediately contact your regional DOH office.
MDA: Minimum Detectable Amount.
NA (Not Analyzed): use in the results column for compounds not included in the current analysis.
ND (Not Detected): ~~use in the results column for compounds analyzed and not detected at a level greater than or equal to the MDA.~~
* **If Gross Alpha is less than , or equal to, 5 pCi/L,** it may be assumed that the Alpha activity is entirely due to Radium 226 (i.e., Radium 226 would not need to be run). The Alpha activity is then added to the Radium 228 activity (i.e., Beta activity) for MCL determinations. If the sum of the Alpha activity plus the Radium 228 activity is greater than 5 pCi/L, Radium 226 activity must then be determined for water system compliance purposes (i.e., Radium 226 + Radium 228 activity)
****Uranium's MCL is given in mass terms (µg/L).** When Uranium is determined by mass methods, it must be converted to activity levels (pCi/L) for calculation of the MCL (Gross Alpha less Uranium). A conversion factor of 0.67 pCi/l per µg/L should be used. Uranium needs to be determined only when the Gross Alpha exceeds 15 pCi/L.
*** Use Gross Alpha in lieu of Radium 226 when the Gross Alpha is less than, or equal to, 5.0 pCi/L
**** **The MCL for beta particle and photon radioactivity from man-made radionuclides** is the average annual concentration which shall not produce an annual dose equivalent to the total body or any internal organ greater than four millirem/yr.

Charge Amount: $78.00

Washington State Public Health Laboratory
1610 NE 150th Street, Shoreline WA. 98155-9701
Phone (206) 418-5486 FAX (206) 418-5465

00007406

RECEIVED DEC 16 2005

RADIONUCLIDE ANALYSES REPORT

System ID No.: 315690	System Name: Harstene Point	
Lab/Sample No: 023612294	Date Collected: 04/11/05 15:30	DOH Source No: S01
Multiple Source Nos:	Sample Type: B	Sample Purpose: C
Date Received: 04/13/05	Date Reported: 12/15/05	Supervisor: SBR/JCM
	Date Analyzed: 12/4/05	Analyst: MAT
County: Mason	Group: A	
Sample Location: Well #1, Well Head		

Send Report To: Mason County Utilities & Waste Attn: Tom Moore
P.O. Box 578
Shelton, WA 98584

Bill To: Mason County Utilities & Waste Management
P.O. Box 578
Shelton, WA 98584

DOH #	ANALYTES	LAB MDA	RESULTS	UNITS	DATE ANALYZED	MCL	ANALYST'S INITIALS & METHOD USED
	EPA/STATE REGULATED (These analyses should be performed in order as listed)						
165	Gross Alpha			pCi/L		--	
166	Radium 228	0.9	ND	pCi/L	12/4/05		MAT/3M DISK
	*Determine Radium 226 activity if Gross Alpha is greater than 5.0 pCi/L**						
39	Radium 226*			pCi/L		--	
	*Determine Uranium activity if Gross Alpha is greater than 15.0 pCi/L ***						
105	Uranium** (mass)			µg/L		30	
105	Uranium** (activity)			pCi/L		20**	
	Depending on the foregoing data determine the following (must be completed if data is available):						
40	Radium 226 + 228			pCi/L		5	
40	Gross Alpha*** + Radium 228			pCi/L		5	
41	Gross Alpha minus Uranium			pCi/L		15	
	Do the following only if specifically requested by the client or the state						
42	Gross Beta****			pCi/L		50	
43	Tritium****			pCi/L		20,000	
44	Strontium 90****			pCi/L		8	
107	Cesium 134****			pCi/L		***	
108	Iodine 131****			pCi/L		***	

Comments:

MCL (Maximum Contaminant Level): If the contaminant amount exceeds the MCL, immediately contact your regional DOH office.
MDA: Minimum Detectable Amount.
NA (Not Analyzed): use in the results column for compounds not included in the current analysis.
ND (Not Detected): use in the results column for compounds analyzed and not detected at a level greater than or equal to the MDA.
* **If Gross Alpha is less than , or equal to, 5 pCi/L,** it may be assumed that the Alpha activity is entirely due to Radium 226 (i.e., Radium 226 would not need to be run). The Alpha activity is then added to the Radium 228 activity (i.e., Beta activity) for MCL determinations. If the sum of the Alpha activity plus the Radium 228 activity is greater than 5 pCi/L, Radium 226 activity must then be determined for water system compliance purposes (i.e., Radium 226 + Radium 228 activity)
****Uranium's MCL is given in mass terms (µg/L).** When Uranium is determined by mass methods, it must be converted to activity levels (pCi/L) for calculation of the MCL (Gross Alpha less Uranium). A conversion factor of 0.67 pCi/l per µg/L should be used. Uranium needs to be determined only when the Gross Alpha exceeds 15 pCi/L.
*** Use Gross Alpha in lieu of Radium 226 when the Gross Alpha is less than, or equal to, 5.0 pCi/L
**** **The MCL for beta particle and photon radioactivity from man-made radionuclides** is the average annual concentration which shall not produce an annual dose equivalent to the total body or any internal organ greater than four millirem/yr.

Charge Amount: $78.00

Department of Health Services
410 North 4th • Shelton, WA 98584
427-9670 ext. 580

WATER ANALYSIS FOR NITRATE

DATE COLLECTED MONTH DAY YEAR	TIME COLLECTED	COUNTY NAME
6/18/02	2:58 ☐ AM ☒ PM	Mason

TYPE OF SYSTEM ☒ PUBLIC ☐ INDIVIDUAL (serves only 1 residence)

IF PUBLIC SYSTEM, COMPLETE: I.D. NO. 3 1 5 6 9 0 CIRCLE GROUP (A) B

NAME OF WATER SYSTEM: Harstene Point

SOURCE # (S01, S02, etc.): S02

SYSTEM ADDRESS: Box 578 Shelton Wa 98584

LOCATION WHERE SAMPLE WAS COLLECTED: filter Room

IS THIS A NEW SOURCE? ☐ YES ☒ NO

COLLECTED BY: (Name) Tom Fischer TEL 360 426 7053

TYPE OF SYSTEM: 1 ☐ Municipal Community; or 2 ☐ Industrial Commercial; or 3 ☐ Private Residence

SEND REPORT TO: (Print Full Name, Address and Zip Code)

Kerry Helser
Box 578
Shelton, WASHINGTON 98584

SOURCE TYPE

1 ☐ Surface; 2 ☒ Well;, 3 ☐ Spring; 4 ☐ Purchased; 9 ☐ Combination or Other

SYSTEM TREATMENT (Check only for Drinking Water Samples)

1 ☐ None; 2 ☒ Chlorination;, 3 ☒ Filtration; 4 ☐ Fluoridation; 5 ☐ Water Softener;

9 ☐ Other (Specify)

REMARKS:

DO NOT WRITE BELOW THIS LINE

(Method: ION SELECTIVE ELECTRODE)

RESULT:

<1.0 mg/L (ppm) Nitrate by the Specific Ion Electrode method.

Date Analyzed 6-19-02 BY CNSpaulding

THE NITRATE LEVEL IN YOUR WATER SYSTEM IS:

☒ IN COMPLIANCE*
☐ OUT OF COMPLIANCE

*10 mg/L (ppm) is the maximum contaminant level allowed.

LAB NO. (7 DIGITS)	DATE, TIME RECEIVED	
056 00066	6-18-02 4:00 pm	

LABORATORY:

Department of Health Services
410 North 4th • Shelton, WA 98584
427-9670 ext. 580

WATER ANALYSIS FOR NITRATE

DATE COLLECTED MONTH DAY YEAR	TIME COLLECTED	COUNTY NAME
6/18/02	3:18 ☐ AM ☒ PM	Mason

TYPE OF SYSTEM ☒ PUBLIC ☐ INDIVIDUAL (serves only 1 residence)

IF PUBLIC SYSTEM, COMPLETE: I.D. NO. 3 1 5 6 9 0 CIRCLE GROUP (A) B

NAME OF WATER SYSTEM: Harstene Point

SOURCE # (S01, S02, etc.): S01

SYSTEM ADDRESS: Box 578 Shelton Wa 98584

LOCATION WHERE SAMPLE WAS COLLECTED: filter room

IS THIS A NEW SOURCE? ☐ YES ☒ NO

COLLECTED BY: (Name) Tom Fischer TEL 360-426 7053

TYPE OF SYSTEM: 1 ☒ Municipal Community; or 2 ☐ Industrial Commercial; or 3 ☐ Private Residence

SEND REPORT TO: (Print Full Name, Address and Zip Code)

Kerry Helser
Box 578
Shelton, WASHINGTON 98584

SOURCE TYPE

1 ☐ Surface; 2 ☒ Well;, 3 ☐ Spring; 4 ☐ Purchased; 9 ☐ Combination or Other

SYSTEM TREATMENT (Check only for Drinking Water Samples)

1 ☐ None; 2 ☒ Chlorination;, 3 ☒ Filtration; 4 ☐ Fluoridation; 5 ☐ Water Softener;

9 ☐ Other (Specify)

REMARKS:

DO NOT WRITE BELOW THIS LINE

(Method: ION SELECTIVE ELECTRODE)

RESULT:

<1.0 mg/L (ppm) Nitrate by the Specific Ion Electrode method.

Date Analyzed 6-19-02 BY CNSpaulding

THE NITRATE LEVEL IN YOUR WATER SYSTEM IS:

☒ IN COMPLIANCE*
☐ OUT OF COMPLIANCE

*10 mg/L (ppm) is the maximum contaminant level allowed.

LAB NO. (7 DIGITS)	DATE, TIME RECEIVED	
056 00067	6-18-02 4:00 pm	

LABORATORY:

Department of Health Services
410 North 4th • Shelton, WA 98584
427-9670 ext. 580

WATER ANALYSIS FOR NITRATE

DATE COLLECTED MONTH DAY YEAR	TIME COLLECTED	COUNTY NAME
6 17 03	2:30 ☐ AM ☒ PM	Mason

TYPE OF SYSTEM: ☒ PUBLIC ☐ INDIVIDUAL (serves only 1 residence)

IF PUBLIC SYSTEM, COMPLETE: I.D. NO. 3 1 5 6 9 0 CIRCLE GROUP (A) B

NAME OF WATER SYSTEM: Harstene Point

SOURCE # (S01, S02, etc.): S02

SYSTEM ADDRESS: Box 578 Shelton 98584

LOCATION WHERE SAMPLE WAS COLLECTED: Well #2

IS THIS A NEW SOURCE? ☐ YES ☒ NO

COLLECTED BY: (Name) Tom Fischer TEL. 360 426-7053

TYPE OF SYSTEM: 1 ☒ Municipal Community; or 2 ☐ Industrial Commercial; or 3 ☐ Private Residence

SEND REPORT TO: (Print Full Name, Address and Zip Code)
Kerry Helser
P.O. Box 578
Shelton, WASHINGTON 98584

SOURCE TYPE
1 ☐ Surface; 2 ☒ Well;, 3 ☐ Spring; 4 ☐ Purchased; 9 ☐ Combination or Other

SYSTEM TREATMENT (Check only for Drinking Water Samples)
1 ☐ None; 2 ☒ Chlorination; 3 ☐ Filtration; 4 ☐ Fluoridation; 5 ☐ Water Softener;
9 ☒ Other (Specify) Before Treatment Well head

REMARKS:

DO NOT WRITE BELOW THIS LINE

(Method: ION SELECTIVE ELECTRODE)

RESULT:

<1.0 mg/L (ppm) Nitrate by the Specific Ion Electrode method.

Date Analyzed 6-18-03 BY C.N. Spaulding

THE NITRATE LEVEL IN YOUR WATER SYSTEM IS:

☒ IN COMPLIANCE*
☐ OUT OF COMPLIANCE

*10 mg/L (ppm) is the maximum contaminant level allowed.

LAB NO. (7 DIGITS)	DATE, TIME RECEIVED	
056 00049	6-17-03	3:30 PM

LABORATORY:

Department of Health Services
410 North 4th • Shelton, WA 98584
427-9670 ext. 580

WATER ANALYSIS FOR NITRATE

DATE COLLECTED MONTH DAY YEAR	TIME COLLECTED	COUNTY NAME
6 17 03	2:45 ☐ AM ☒ PM	Mason

TYPE OF SYSTEM: ☒ PUBLIC ☐ INDIVIDUAL (serves only 1 residence)

IF PUBLIC SYSTEM, COMPLETE: I.D. NO. 3 1 5 6 9 0 CIRCLE GROUP (A) B

NAME OF WATER SYSTEM: Harstene Point

SOURCE # (S01, S02, etc.): S01

SYSTEM ADDRESS: Box 578 Shelton 98584

LOCATION WHERE SAMPLE WAS COLLECTED: Well #1

IS THIS A NEW SOURCE? ☐ YES ☒ NO

COLLECTED BY: (Name) Tom Fischer TEL. 360 426-7053

TYPE OF SYSTEM: 1 ☒ Municipal Community; or 2 ☐ Industrial Commercial; or 3 ☐ Private Residence

SEND REPORT TO: (Print Full Name, Address and Zip Code)
Kerry Helser
P.O. Box 578
Shelton, WASHINGTON 98584

SOURCE TYPE
1 ☐ Surface; 2 ☒ Well;, 3 ☐ Spring; 4 ☐ Purchased; 9 ☐ Combination or Other

SYSTEM TREATMENT (Check only for Drinking Water Samples)
1 ☐ None; 2 ☒ Chlorination; 3 ☒ Filtration; 4 ☐ Fluoridation; 5 ☐ Water Softener;
9 ☒ Other (Specify) Before Treatment well head

REMARKS:

DO NOT WRITE BELOW THIS LINE

(Method: ION SELECTIVE ELECTRODE)

RESULT:

<1.0 mg/L (ppm) Nitrate by the Specific Ion Electrode method.

Date Analyzed 6-18-03 BY C.N. Spaulding

THE NITRATE LEVEL IN YOUR WATER SYSTEM IS:

☒ IN COMPLIANCE*
☐ OUT OF COMPLIANCE

*10 mg/L (ppm) is the maximum contaminant level allowed.

LAB NO. (7 DIGITS)	DATE, TIME RECEIVED	
056 00050	6-17-03	3:30 PM

LABORATORY:

410 North 4th • Shelton, WA 98584
427-9670 ext. 580

WATER ANALYSIS FOR NITRATE

DATE COLLECTED MONTH DAY YEAR	TIME COLLECTED	COUNTY NAME
6 / 14 / 04	11 : 15 ☑ AM ☐ PM	Mason

TYPE OF SYSTEM ☑ PUBLIC ☐ INDIVIDUAL (serves only 1 residence)

IF PUBLIC SYSTEM, COMPLETE: I.D. NO. 3 1 5 6 9 0 CIRCLE GROUP (A) B

NAME OF WATER SYSTEM: Hartstene Point

SOURCE # (S01, S02, etc.): S02

SYSTEM ADDRESS: P.O. BOX 578

LOCATION WHERE SAMPLE WAS COLLECTED:

IS THIS A NEW SOURCE? ☐ YES ☑ NO

COLLECTED BY: (Name) Tom Fischer TEL. 360 426 7053

TYPE OF SYSTEM: 1 ☑ Municipal Community; or 2 ☐ Industrial Commercial; or 3 ☐ Private Residence

SEND REPORT TO: (Print Full Name, Address and Zip Code)

Keri Helser

, WASHINGTON

SOURCE TYPE

1 ☐ Surface; 2 ☑ Well;, 3 ☐ Spring; 4 ☐ Purchased; 9 ☐ Combination or Other

SYSTEM TREATMENT (Check only for Drinking Water Samples)

1 ☐ None; 2 ☑ Chlorination;, 3 ☑ Filtration; 4 ☐ Fluoridation; 5 ☐ Water Softener;

9 ☐ Other (Specify)

REMARKS: Sample taken before Treatment

DO NOT WRITE BELOW THIS LINE

(Method: ION SELECTIVE ELECTRODE)

RESULT:

<1 mg/L (ppm) Nitrate by the Specific Ion Electrode method.

Date Analyzed 6/16/04 BY A. Reynolds

THE NITRATE LEVEL IN YOUR WATER SYSTEM IS:

☒ IN COMPLIANCE*

☐ OUT OF COMPLIANCE

*10 mg/L (ppm) is the maximum contaminant level allowed.

LAB NO. (7 DIGITS)	DATE, TIME RECEIVED	
056 00055	6/15 9:30	ADR

LABORATORY:

410 North 4th • Shelton, WA 98584
427-9670 ext. 580

WATER ANALYSIS FOR NITRATE

DATE COLLECTED MONTH DAY YEAR	TIME COLLECTED	COUNTY NAME
12 / 21 / 04	3 : 00 ☐ AM ☑ PM	Mason

TYPE OF SYSTEM ☑ PUBLIC ☐ INDIVIDUAL (serves only 1 residence)

IF PUBLIC SYSTEM, COMPLETE: I.D. NO. 3 1 5 6 9 0 CIRCLE GROUP (A) B

NAME OF WATER SYSTEM: Hartstene Point

SOURCE # (S01, S02, etc.): S01

SYSTEM ADDRESS: BOX 578 Shelton Wa

LOCATION WHERE SAMPLE WAS COLLECTED: Well #1

IS THIS A NEW SOURCE? ☐ YES ☑ NO

COLLECTED BY: (Name) Tom Fischer TEL.

TYPE OF SYSTEM: 1 ☑ Municipal Community; or 2 ☐ Industrial Commercial; or 3 ☐ Private Residence

SEND REPORT TO: (Print Full Name, Address and Zip Code)

, WASHINGTON

SOURCE TYPE

1 ☐ Surface; 2 ☑ Well;, 3 ☐ Spring; 4 ☐ Purchased; 9 ☐ Combination or Other

SYSTEM TREATMENT (Check only for Drinking Water Samples)

1 ☐ None; 2 ☑ Chlorination;, 3 ☑ Filtration; 4 ☐ Fluoridation; 5 ☐ Water Softener;

9 ☐ Other (Specify)

REMARKS: Sample taken before Treatment

DO NOT WRITE BELOW THIS LINE

(Method: ION SELECTIVE ELECTRODE)

RESULT:

<1.0 mg/L (ppm) Nitrate by the Specific Ion Electrode method.

Date Analyzed 12-22-04 BY C.N. Spaulding

THE NITRATE LEVEL IN YOUR WATER SYSTEM IS:

☒ IN COMPLIANCE*

☐ OUT OF COMPLIANCE

*10 mg/L (ppm) is the maximum contaminant level allowed.

LAB NO. (7 DIGITS)	DATE, TIME RECEIVED	
056 00124	12-22-04 0845	CNS

LABORATORY:

Department of Health Services
410 North 4th • Shelton, WA 98584
427-9670 ext. 580

WATER ANALYSIS FOR NITRATE

DATE COLLECTED MONTH DAY YEAR	TIME COLLECTED	COUNTY NAME
6 / 20 / 05	3:00 ☐ AM ☒ PM	Mason

TYPE OF SYSTEM: ☒ PUBLIC ☐ INDIVIDUAL (serves only 1 residence)

IF PUBLIC SYSTEM, COMPLETE: I.D. NO. 3 1 5 6 9 0 CIRCLE GROUP (A) B

NAME OF WATER SYSTEM: Harstene Point

SOURCE # (S01, S02, etc.): S02

SYSTEM ADDRESS:

LOCATION WHERE SAMPLE WAS COLLECTED: Well #2

IS THIS A NEW SOURCE? ☐ YES ☒ NO

COLLECTED BY: (Name) Tom Fischer TEL.

TYPE OF SYSTEM: 1 ☒ Municipal Community or 2 ☐ Industrial Commercial or 3 ☐ Private Residence

SEND REPORT TO: (Print Full Name, Address and Zip Code)

, WASHINGTON

SOURCE TYPE: 1 ☐ Surface; 2 ☒ Well;, 3 ☐ Spring; 4 ☐ Purchased; 9 ☐ Combination or Other

SYSTEM TREATMENT (Check only for Drinking Water Samples)

1 ☐ None; 2 ☒ Chlorination;, 3 ☒ Filtration; 4 ☐ Fluoridation; 5 ☐ Water Softener;

9 ☐ Other (Specify)

REMARKS: Taken before Treatment

DO NOT WRITE BELOW THIS LINE

(Method: ION SELECTIVE ELECTRODE)

RESULT:

<1.0 mg/L (ppm) Nitrate by the Specific Ion Electrode method.

Date Analyzed 6-22-05 BY C.N. Spaulding

THE NITRATE LEVEL IN YOUR WATER SYSTEM IS:

☒ IN COMPLIANCE*

☐ OUT OF COMPLIANCE

*10 mg/L (ppm) is the maximum contaminant level allowed.

LAB NO. (7 DIGITS)	DATE, TIME RECEIVED	
056 00044	6-21-05 9:30	CMS

LABORATORY:

Department of Health Services
410 North 4th • Shelton, WA 98584
427-9670 ext. 580

WATER ANALYSIS FOR NITRATE

DATE COLLECTED MONTH DAY YEAR	TIME COLLECTED	COUNTY NAME
7 / 5 / 05	3:30 ☐ AM ☒ PM	Mason

TYPE OF SYSTEM: ☒ PUBLIC ☐ INDIVIDUAL (serves only 1 residence)

IF PUBLIC SYSTEM, COMPLETE: I.D. NO. 3 1 5 6 9 0 CIRCLE GROUP (A) B

NAME OF WATER SYSTEM: Harstene Point

SOURCE # (S01, S02, etc.): S01

SYSTEM ADDRESS:

LOCATION WHERE SAMPLE WAS COLLECTED: Well #1

IS THIS A NEW SOURCE? ☐ YES ☒ NO

COLLECTED BY: (Name) Tom Fischer TEL. 360 427 7771

TYPE OF SYSTEM: 1 ☒ Municipal Community or 2 ☐ Industrial Commercial or 3 ☐ Private Residence

SEND REPORT TO: (Print Full Name, Address and Zip Code)

, WASHINGTON

SOURCE TYPE: 1 ☐ Surface; 2 ☒ Well;, 3 ☐ Spring; 4 ☐ Purchased; 9 ☐ Combination or Other

SYSTEM TREATMENT (Check only for Drinking Water Samples)

1 ☐ None; 2 ☒ Chlorination;, 3 ☒ Filtration; 4 ☐ Fluoridation; 5 ☐ Water Softener;

9 ☐ Other (Specify)

REMARKS: Sample Taken before Treatment

DO NOT WRITE BELOW THIS LINE

(Method: ION SELECTIVE ELECTRODE)

RESULT:

<1.0 mg/L (ppm) Nitrate by the Specific Ion Electrode method.

Date Analyzed 7-7-05 BY C.N. Spaulding

THE NITRATE LEVEL IN YOUR WATER SYSTEM IS:

☒ IN COMPLIANCE*

☐ OUT OF COMPLIANCE

*10 mg/L (ppm) is the maximum contaminant level allowed.

LAB NO. (7 DIGITS)	DATE, TIME RECEIVED	
056 00055	7-6-05 9:00	CMS

LABORATORY:

Department of Health Services
410 North 4th • Shelton, WA 98584
427-9670 ext. 580

WATER ANALYSIS FOR NITRATE

DATE COLLECTED MONTH DAY YEAR	TIME COLLECTED	COUNTY NAME
6/6/06	____:____ ☐ AM ☐ PM	Mason

TYPE OF SYSTEM
☑ PUBLIC
☐ INDIVIDUAL (serves only 1 residence)

IF PUBLIC SYSTEM, COMPLETE: I.D. NO. 3 1 5 6 9 0 — CIRCLE GROUP (A) B

NAME OF WATER SYSTEM: Harstene Point
SOURCE # (S01, S02, etc.): S02

SYSTEM ADDRESS:

LOCATION WHERE SAMPLE WAS COLLECTED: well #2
IS THIS A NEW SOURCE? ☐ YES ☑ NO

COLLECTED BY: (Name) Tom F
TEL.

TYPE OF SYSTEM: 1 ☑ Municipal Community; or 2 ☐ Industrial Commercial; or 3 ☐ Private Residence

SEND REPORT TO: (Print Full Name, Address and Zip Code)
Tom Moore
P.O. BOX 578
Shelton, WASHINGTON 98584

SOURCE TYPE
1 ☐ Surface; 2 ☑ Well;, 3 ☐ Spring; 4 ☐ Purchased; 9 ☐ Combination or Other

SYSTEM TREATMENT (Check only for Drinking Water Samples)
1 ☐ None; 2 ☑ Chlorination;, 3 ☑ Filtration; 4 ☐ Fluoridation; 5 ☐ Water Softener;
9 ☐ Other (Specify)

REMARKS: $15.00 MOORE
410-200-000
534.80.91.10

DO NOT WRITE BELOW THIS LINE

(Method: ION SELECTIVE ELECTRODE)

RESULT:

<1.0 mg/L (ppm) Nitrate by the Specific Ion Electrode method.

Date Analyzed 6-7-06 BY C.N. Spaulding

THE NITRATE LEVEL IN YOUR WATER SYSTEM IS:

☑ IN COMPLIANCE*
☐ OUT OF COMPLIANCE

*10 mg/L (ppm) is the maximum contaminant level allowed.

LAB NO. (7 DIGITS)	DATE, TIME RECEIVED	
5600084 056 00084	6-6-06 1615	WTM

LABORATORY:

Washington State Department of Health
Division of Environmental Health
Office of Drinking Water

Monitoring Waiver Option Information

PWSID: 31569 0
Source: S02

NOTE: This sheet provides information about sampling requirements for source S02 with and without a waiver.

System: HARTSTENE POINTE **PWSID:** 31569 0 **Report Date:** 9/15/2005
Contact: THOMAS V. MOORE **Group:** A - Comm **County:** MASON **Region:** SOUTHWEST
SMAID: **SMA Name:**

SOURCE INFORMATION

DOH Source	Source Name	Source Type	Source Use
S02	WELL #2 AHB690	Well	Permanent

ORGANIC WAIVER INFORMATION Monitoring Period 2005 - 2007

2005-2007 Organic Waiver Type: **Organic Renewal**

Organic Monitoring Requirements

T Method	Samples Required WITHOUT A Waiver	Samples Required WITH A Waiver
515 (SOC - Herbicides)	1 sample every 3 years	No sample required thru end of Dec 2007
531 (SOC - Insecticides)	1 sample every 3 years	No sample required thru end of Dec 2007
525 (SOC - Pesticides)	1 sample every 3 years	No sample required thru end of Dec 2007
524 (VOCs)	1 sample every 3 years	No Waiver Option

INORGANIC WAIVER INFORMATION Monitoring Period 2005 - 2007

NOTE: An annual nitrate sample is still required. All sources must be sampled for nitrate each year even if the source gets an IOC waiver.

2005-2007 Inorganic Waiver Type: **Inorganic Waiver**

Inorganic Monitoring Requirements

Test Method	Samples Required WITHOUT A Waiver	Samples Required WITH A Waiver
Inorganics	1 sample every 3 years	1 Sample every 9 years

Appendix F

Coliform Monitoring Results

Mason County
Department of Health Services
410 North 4th • Shelton, WA 98584
427-9670 ext. 580

WATER BACTERIOLOGICAL ANALYSIS

SAMPLE COLLECTION; READ INSTRUCTIONS THOROUGHLY

DATE COLLECTED (MONTH DAY YEAR)	TIME COLLECTED	COUNTY NAME
6 / 20 / 05	3 : 20 ☐ AM ☒ PM	Mason

TYPE OF SYSTEM: ☒ PUBLIC ☐ INDIVIDUAL (serves only 1 residence)

IF PUBLIC SYSTEM, COMPLETE: I.D. NO. 3 1 5 6 9 0 CIRCLE GROUP (A) B

NAME OF SYSTEM: Harstene Point

PARCEL:

SPECIFIC LOCATION WHERE SAMPLE COLLECTED: Well #2

TELEPHONE NO. DAY ( ) EVENING ( )

SAMPLE COLLECTED BY: (Name) Tom Fischer

SYSTEM OWNER/MGR: (Name) Tom Moore

SOURCE TYPE: ☐ GROUND WATER UNDER SURFACE INFLUENCE ☐ SURFACE ☒ WELL or WELL FIELD ☐ SPRING ☐ PURCHASED or INTERTIE ☐ COMBINATION or OTHER

SEND REPORT TO: (Print full Name, Address and Zip)

TYPE OF SAMPLE (check only one in this column)

☒ ROUTINE DRINKING WATER check treatment → ☒ Chlorinated (Residual: .19 Total ___ Free) ☐ Filtered ☐ Untreated or Other ___

☐ REPEAT SAMPLE Previous coliform presence — Lab # ___ Date ___

☐ RAW SOURCE WATER ☐ NEW CONSTRUCTION or REPAIRS ☐ OTHER (Specify) ___ — Source # S ☐ ☐ — ☐ Total Coliform ☐ Fecal Coliform

REMARKS: MC8165 410200000

(LAB USE ONLY) DRINKING WATER RESULTS

☐ UNSATISFACTORY, Coliforms present — REPEAT SAMPLES REQUIRED: ☐ E. Coli absent ☐ E. Coli absent ☐ Fecal present ☐ Fecal absent

☒ SATISFACTORY Coliforms absent 534.80.91.10

OTHER LABORATORY RESULTS $18.00

TOTAL COLIFORM ___ /100 ml E. COLI ___ /100 ml

FECAL COLIFORM ___ /100 ml PLATE COUNT ___ / ml

ANOTHER SAMPLE REQUIRED

SAMPLE NOT TESTED BECAUSE: ☐ Samples too old ☐ Wrong container ☐ Incomplete form ☐ ___

TEST UNSUITABLE BECAUSE: ☐ Confluent growth ☐ TNTC ☐ Turbid culture ☐ Excess debris

SEE REVERSE SIDE OF BLUE COPY FOR EXPLANATION OF RESULTS

LAB NO. (7 DIGITS)	DATE, TIME RECEIVED	RECEIVED BY
056 00909 (0560 0909)	6-21-05 9:30	CNS

DATE REPORTED: 6-22-05 LABORATORY:

Mason County
Department of Health Services
410 North 4th • Shelton, WA 98584
427-9670 ext. 580

WATER BACTERIOLOGICAL ANALYSIS

SAMPLE COLLECTION; READ INSTRUCTIONS THOROUGHLY

DATE COLLECTED (MONTH DAY YEAR)	TIME COLLECTED	COUNTY NAME
7 / 5 / 05	3 : 10 ☐ AM ☒ PM	Mason

TYPE OF SYSTEM: ☒ PUBLIC ☐ INDIVIDUAL (serves only 1 residence)

IF PUBLIC SYSTEM, COMPLETE: I.D. NO. 3 1 5 6 9 0 CIRCLE GROUP (A) B

NAME OF SYSTEM: Harstene Point

PARCEL:

SPECIFIC LOCATION WHERE SAMPLE COLLECTED: Park kitchen

TELEPHONE NO. DAY (360) 427 7771 EVENING ( )

SAMPLE COLLECTED BY: (Name) Tom Fischer

SYSTEM OWNER/MGR: (Name) Tom Moore

SOURCE TYPE: ☐ GROUND WATER UNDER SURFACE INFLUENCE ☐ SURFACE ☒ WELL or WELL FIELD ☐ SPRING ☐ PURCHASED or INTERTIE ☐ COMBINATION or OTHER

SEND REPORT TO: (Print full Name, Address and Zip)

TYPE OF SAMPLE (check only one in this column)

☒ ROUTINE DRINKING WATER check treatment → ☒ Chlorinated (Residual: ___ Total .21 Free) ☐ Filtered ☐ Untreated or Other ___

☐ REPEAT SAMPLE Previous coliform presence — Lab # ___ Date ___

☐ RAW SOURCE WATER ☐ NEW CONSTRUCTION or REPAIRS ☐ OTHER (Specify) ___ — Source # S ☐ ☐ — ☐ Total Coliform ☐ Fecal Coliform

REMARKS: 410200000

(LAB USE ONLY) DRINKING WATER RESULTS

☐ UNSATISFACTORY, Coliforms present — REPEAT SAMPLES REQUIRED: ☐ E. Coli absent ☐ E. Coli absent ☐ Fecal present ☐ Fecal absent

☒ SATISFACTORY Coliforms absent 534.80.91.10

OTHER LABORATORY RESULTS $18.00

TOTAL COLIFORM ___ /100 ml E. COLI ___ /100 ml

FECAL COLIFORM ___ /100 ml PLATE COUNT ___ / ml

ANOTHER SAMPLE REQUIRED

SAMPLE NOT TESTED BECAUSE: ☐ Samples too old ☐ Wrong container ☐ Incomplete form ☐ ___

TEST UNSUITABLE BECAUSE: ☐ Confluent growth ☐ TNTC ☐ Turbid culture ☐ Excess debris

SEE REVERSE SIDE OF BLUE COPY FOR EXPLANATION OF RESULTS

LAB NO. (7 DIGITS)	DATE, TIME RECEIVED	RECEIVED BY
056 00987 (0560 0987)	7-6-05 9:00	CNS

DATE REPORTED: 7-7-05 LABORATORY:

410 North 4th, Shelton, WA 98594, 427-9670 ext. 580

COLIFORM BACTERIA ANALYSIS

Date Sample Collected (Month Day Year)	Time Sample Collected	County
08/16/05	3:30 ☐ AM ☒ PM	Mason

Type of Water System (check only one box)
☒ Group A Public ☐ Private Household
☐ Group B Public ☐ Other_____

Group A and Group B Systems – Provide from Water Facilities Inventory (WFI):
ID# 3 1 5 6 9 0

System Name: Marstene Point

Contact Person: Tom Moore

Day Phone: (360) 427-7771 Cell Phone: ( )

Eve. Phone: ( ) FAX: ( )

SAMPLE INFORMATION

Sample collected by (name): Tom Fischer

Specific location where sample collected (address or sample site, and type of faucet): Kitchen by Tennis Court

Special instructions or comments:

Send results to: (Print full name, address, and zip code):

Type of Sample (must check only one box of #1 through #4 listed below)

1. ☒ **Routine Distribution Sample**
Provide information below.
Chlorinated: Yes ✓ No_____
Chlorine Residual: Total_____ Free .21

2. ☐ **Repeat Sample (follow-up to an unsatisfactory sample)**
Provide information below.
Unsatisfactory routine lab number: _____
Unsatisfactory routine collect date: ___/___/___
Chlorinated: Yes_____ No_____
Chlone Residual:
Total_____ Free_____

3. ☐ **Raw Water Source Sample**
Required for Surface Water, GWI, and some Spring Sources) | S | | |
Public Systems must provide Source Number from Water Facilities Inventory (WFI)

4. ☐ **Sample Collected for Information Only**
Construction_____ Repairs_____ Private Residence_____ Other_____

LAB USE ONLY — DRINKING WATER RESULTS — LAB USE ONLY

☐ **Unsatisfactory**
Total Coliform Present and
☐ E.coli present ☐ E.coli absent
☐ Fecal coliform present ☐ Fecal coliform absent

☒ **Satisfactory**
Total Coliform Absent

☐ **Replacement Sample Required**

Sample not tested because:
☐ Sample too old (>30 hours)
☐ Improper container
☐ _____

Test unsuitable because:
☐ TNTC
☐ Turbid culture
☐ _____

Bacterial Density Results: Plate Count_____/ml. E.coli_____/100ml.
Total Coliform_____/100ml. Fecal Coliform_____/100ml.

Method Code: MICR - 2600	Date and Time Received
Date Analyzed: 8-17-05	Date Reported: 8-18-05
05601251 Sample Number (DOH number plus five digits)	Parcel #:

DOH Form #331-320 (revised 7/05)

Mason County
Environmental Health
426 W Cedar St. / PO Box 1666
Shelton, WA 98584

WAT **SIS**

SAMPLE ..., READ INSTRUCTIONS THOROUGHLY

DATE COLLECTED MONTH DAY YEAR	TIME COLLECTED	COUNTY NAME
9 12 96	3 : 00 ☐ AM ☒ PM	Mason

TYPE OF SYSTEM ☒ PUBLIC ☐ INDIVIDUAL (serves only 1 residence)

IF PUBLIC SYSTEM, COMPLETE: I.D. NO. 3 1 5 6 9 0 CIRCLE GROUP A B

NAME OF SYSTEM: Hartstene Pt

SPECIFIC LOCATION WHERE SAMPLE COLLECTED: Sample Tap

TELEPHONE NO. DAY (360) 427-7771 EVENING (360) 426-7013

SAMPLE COLLECTED BY: (Name) Matt McWilliams

SYSTEM OWNER/MGR. (Name) Mason County

SOURCE TYPE ☐ GROUND WATER UNDER SURFACE INFLUENCE
☐ SURFACE ☒ WELL or WELL FIELD ☐ SPRING ☐ PURCHASED or INTERTIE ☐ COMBINATION or OTHER

SEND REPORT TO: (Print full Name, Address and Zip)
P.O. Box 1578
Shelton WASHINGTON 98584

TYPE OF SAMPLE
(check only one in this column)

☒ ROUTINE DRINKING WATER → check treatment
☒ Chlorinated (Residual: ___ Total 1.20 ___ Free)
☒ Filtered
☐ Untreated or Other ___

☐ REPEAT SAMPLE Previous coliform presence — Lab # ___ Date ___

☐ RAW SOURCE WATER — Source # S ☐ Total Coliform
☐ NEW CONSTRUCTION or REPAIRS ☐ Fecal Coliform
☐ OTHER (Specify) ___

REMARKS: $18.00 MS5963

(LAB USE ONLY) DRINKING WATER RESULTS

☐ UNSATISFACTORY, coliforms present
REPEAT SAMPLES REQUIRED — ☐ E. Coli present ☐ E. Coli absent ☐ Fecal present ☐ Fecal absent

☒ SATISFACTORY Coliforms absent
A10500000

OTHER LABORATORY RESULTS 5348.9410

TOTAL COLIFORM ___/100 ml E. COLI ___/100 ml
FECAL COLIFORM ___/100 ml PLATE COUNT ___/ml

ANOTHER SAMPLE REQUIRED

SAMPLE NOT TESTED BECAUSE:
☐ Sample too old
☐ Wrong container
☐ Incomplete form
☐ ___

TEST UNSUITABLE BECAUSE:
☐ Confluent growth
☐ TNTC
☐ Turbid culture
☐ Excess debris

SEE REVERSE SIDE OF GREEN COPY FOR EXPLANATION OF RESULTS

LAB NO. (7 DIGITS)	DATE, TIME RECEIVED	
8905601464	9-27-05 0905	UB

DATE REPORTED 9-29-05 LABORATORY:

410 North 4th, Shelton, WA 98594, 427-9670 ext. 580

COLIFORM BACTERIA ANALYSIS

Date Sample Collected (Month Day Year)	Time Sample Collected	County
10/24/05	3:30 ☐ AM ☒ PM	Mason

Type of Water System (check only one box)
☒ Group A Public ☐ Private Household
☐ Group B Public ☐ Other_____

Group A and Group B Systems – Provide from Water Facilities Inventory (WFI):
ID# 3 1 5 6 9 0
System Name: Harstene Point

Contact Person: Tom Moore
Day Phone: (360) 427-7771 Cell Phone: ( )
Eve. Phone: ( ) FAX: ( )

SAMPLE INFORMATION

Sample collected by (name): Tom Fischer
Specific location where sample collected (address or sample site, and type of faucet): 552 PDW outside faucet
Special instructions or comments:

Send results to: (Print full name, address, and zip code):

Type of Sample (Must check only one box of #1 through #4 listed below)

1. ☒ **Routine Distribution Sample**
Provide information below.
Chlorinated: Yes ✓ No_____
Chlorine Residual: Total .16 Free_____

2. ☐ **Repeat Sample (follow-up to an unsatisfactory sample)**
Provide information below.
Unsatisfactory routine lab number: _____
Unsatisfactory routine collect date: ___/___/___
Chlorinated: Yes_____ No_____
Chlone Residual:
Total_____ Free_____

3. ☐ **Raw Water Source Sample**
Required for Surface Water, GWI, and some Spring Sources) S
Public Systems must provide Source Number from Water Facilities Inventory (WFI)

4. ☐ **Sample Collected for Information Only**
Construction_____ Repairs_____ Private Residence_____ Other_____

LAB USE ONLY — DRINKING WATER RESULTS — LAB USE ONLY

☐ **Unsatisfactory**
Total Coliform Present and
☐ E.coli present ☐ E.coli absent
☐ Fecal coliform present ☐ Fecal coliform absent

☒ **Satisfactory**
Total Coliform Absent

☐ **Replacement Sample Required**

Sample not tested because:
☐ Sample too old (>30 hours)
☐ Improper container
☐ _____

Test unsuitable because:
☐ TNTC
☐ Turbid culture
☐ _____

Bacterial Density Results: Plate Count_____/ml. E.coli_____/100ml.
Total Coliform_____/100ml. Fecal Coliform_____/100ml.

Method Code: MICR - 2600
Date and Time Received: 10-24-05 1558
Date Analyzed: 10-25-05
Date Reported: 10-26-05
Sample Number (DOH number plus five digits): 05601616
Parcel #:

DOH Form #331-320 (revised 7/05)

MA0003
AB2000
0B1 80910
#1860

COLIFORM BACTERIA ANALYSIS

Date Sample Collected (Month Day Year)	Time Sample Collected	County
11 / 28 / 05	3:00 ☐ AM ☑ PM	Mason

Type of Water System (check only one box)
☑ Group A Public ☐ Private Household
☐ Group B Public ☐ Other

Group A and Group B Systems – Provide from Water Facilities Inventory (WFI):
ID# 3 1 5 6 9 0

System Name: Harstene Point

Contact Person: Tom Fischer

Day Phone: (360) 426 7053 Cell Phone: ( )

Eve. Phone: ( ) FAX: ( ) 426 7053

Send results to: (Print full name, address, and zip code):

SAMPLE INFORMATION

Sample collected by (name): Tom Fischer

Specific location where sample collected (address or sample site, and type of faucet): Clubhouse

Special instructions or comments:

1. ☑ Routine Distribution Sample
Provide information below.
Chlorinated: Yes ✓ No
Chlorine Residual: Total ____ Free .22

2. ☐ Repeat Sample (follow-up to an unsatisfactory sample)
Provide information below.
Unsatisfactory routine lab number:
Unsatisfactory routine collect date: / /
Chlorinated: Yes ____ No ____
Chlone Residual: Total ____ Free ____

3. ☐ Raw Water Source Sample
Required for Surface Water, GWI, and some Spring Sources) S
Public Systems must provide Source Number from Water Facilities Inventory (WFI)

4. ☑ Sample Collected for Information Only
Construction ____ Repairs ____ Private Residence ____ Other ____

LAB USE ONLY — DRINKING WATER RESULTS — LAB USE ONLY

☐ Unsatisfactory
Total Coliform Present and
☐ E.coli present ☐ E.coli absent
☐ Fecal coliform present ☐ Fecal coliform absent

☑ Satisfactory
Total Coliform Absent

☐ Replacement Sample Required

Sample not tested because:
☐ Sample too old (>30 hours)
☐ Improper container
☐

Test unsuitable because:
☐ TNTC
☐ Turbid culture
☐

Bacterial Density Results: Plate Count ____ /ml. E.coli ____ /100ml.
Total Coliform ____ /100ml. Fecal Coliform ____ /100ml.

Method Code: MICR - 2600
Date and Time Received: 11-29-05 0936
Date Analyzed: 11-29-05
Date Reported: 11-30-05
05601786 ____ 150
Sample Number (DOH number plus five digits)
Parcel #:

DOH Form #331-320 (revised 7/05)

Mason County Department of Health Services
410 North 4th, Shelton, WA 98594, 427-9670 ext. 580

COLIFORM BACTERIA ANALYSIS

Date Sample Collected (Month Day Year)	Time Sample Collected	County
12 / 07 / 05	2:30 ☐ AM ☑ PM	Mason

Type of Water System (check only one box)
☑ Group A Public ☐ Private Household
☐ Group B Public ☐ Other

Group A and Group B Systems – Provide from Water Facilities Inventory (WFI):
ID# 3 1 5 6 9 0

System Name: Harstene Point

Contact Person: Tom Fischer

Day Phone: (360) 426 7053 Cell Phone: ( )

Eve. Phone: ( ) FAX: ( )

Send results to: (Print full name, address, and zip code):

SAMPLE INFORMATION

Sample collected by (name): Tom Fischer

Specific location where sample collected (address or sample site, and type of faucet): Tap #2

Special instructions or comments:

Type of Sample (must check only one box of #1 through #4 listed below)

1. ☑ Routine Distribution Sample
Provide information below.
Chlorinated: Yes ✓ No
Chlorine Residual: Total ____ Free .21

2. ☐ Repeat Sample (follow-up to an unsatisfactory sample)
Provide information below.
Unsatisfactory routine lab number:
Unsatisfactory routine collect date: / /
Chlorinated: Yes ____ No ____
Chlone Residual: Total ____ Free ____

3. ☐ Raw Water Source Sample
Required for Surface Water, GWI, and some Spring Sources) S
Public Systems must provide Source Number from Water Facilities Inventory (WFI)

4. ☐ Sample Collected for Information Only
Construction ____ Repairs ____ Private Residence ____ Other ____

LAB USE ONLY — DRINKING WATER RESULTS — LAB USE ONLY

☐ Unsatisfactory
Total Coliform Present and
☐ E.coli present ☐ E.coli absent
☐ Fecal coliform present ☐ Fecal coliform absent

☑ Satisfactory
Total Coliform Absent

☐ Replacement Sample Required

Sample not tested because:
☐ Sample too old (>30 hours)
☐ Improper container
☐

Test unsuitable because:
☐ TNTC
☐ Turbid culture
☐

Bacterial Density Results: Plate Count ____ /ml. E.coli ____ /100ml.
Total Coliform ____ /100ml. Fecal Coliform ____ /100ml.

Method Code: MICR - 2600
Date and Time Received: 12-7-05 1550
Date Analyzed: 12-8-05
Date Reported: 12-9-05
05601835 ____ 150
Sample Number (DOH number plus five digits)
Parcel #:

DOH Form #331-320 (revised 7/05)

COLIFORM BACTERIA ANALYSIS

Date Sample Collected	Time Sample Collected	County
1 / 23 / 06 (Month Day Year)	2:30 ☐ AM ☒ PM	Mason

Type of Water System (check only one box)
☒ Group A Public ☐ Private Household
☐ Group B Public ☐ Other_____

Group A and Group B Systems – Provide from Water Facilities Inventory (WFI):
ID# 3 1 5 6 9 0
System Name: Harstene Point

Contact Person: Tom Fischer

Day Phone: (360) 426 7053 Cell Phone: ( ) 490-4655

Eve. Phone: ( ) FAX: ( )

SAMPLE INFORMATION

Sample collected by (name): Tom Fischer

Specific location where sample collected (address or sample site, and type of faucet): Park sink

Special instructions or comments:

Send results to: (Print full name, address, and zip code):

1. ☒ **Routine Distribution Sample**
Provide information below.
Chlorinated: Yes X No_____
Chlorine Residual: Total_____ Free .21

2. ☐ **Repeat Sample (follow-up to an unsatisfactory sample)**
Provide information below.
Unsatisfactory routine lab number: _____
Unsatisfactory routine collect date: __/__/__
Chlorinated: Yes_____ No_____
Chlone Residual:
Total_____ Free_____

3. ☐ **Raw Water Source Sample**
Required for Surface Water, GWI, and some Spring Sources) S
Public Systems must provide Source Number from Water Facilities Inventory (WFI)

4. ☐ **Sample Collected for Information Only**
Construction_____ Repairs_____ Private Residence_____ Other_____

LAB USE ONLY — DRINKING WATER RESULTS — LAB USE ONLY

☐ **Unsatisfactory**
Total Coliform Present **and**
☐ E.coli present ☐ E.coli absent
☐ Fecal coliform present ☐ Fecal coliform absent

☒ **Satisfactory**
Total Coliform Absent

☐ **Replacement Sample Required**

Sample not tested because:
☐ Sample too old (>30 hours)
☐ Improper container
☐ _____

Test unsuitable because:
☐ TNTC
☐ Turbid culture
☐ _____

Bacterial Density Results: Plate Count_____/ml. E.coli_____/100ml.
Total Coliform_____/100ml. Fecal Coliform_____/100ml.

Method Code:	Date and Time Received
MICR - 2600	1-23-06 1547
Date Analyzed: 1-24-06	Date Reported: 1-25-06
05600095 Sample Number (DOH number plus five digits)	Parcel #:

MC2600
410200000
534.30.91.10
48.00

DOH Form #331-320 (revised 7/05)

COLIFORM BACTERIA ANALYSIS

DOH Form #331-320 (revised 7/05)

Date Sample Collected	Time Sample Collected	County
2 23 06 (Month Day Year)	11:15 ☑ AM ☐ PM	Mason

Type of Water System (check only one box)
☐ Group A Public ☐ Private Household
☑ Group B Public ☐ Other_____

Group A and Group B Systems – Provide from Water Facilities Inventory (WFI):
ID# 3 1 5 6 9 0

System Name: Horstene Point

Contact Person: Tom Fischer

Day Phone: (360) 426-7053 Cell Phone: (360) 490-4655

Eve. Phone: ( ) FAX: ( )

Send results to: (Print full name, address, and zip code):

SAMPLE INFORMATION

Sample collected by (name): Tom Fischer

Specific location where sample collected (address or sample site, and type of faucet): Treatment Plant

Special instructions or comments:

1. ☐ **Routine Distribution Sample**
Provide information below.
Chlorinated: Yes X No_____
Chlorine Residual: Total_____ Free .21

2. ☐ **Repeat Sample (follow-up to an unsatisfactory sample)**
Provide information below.
Unsatisfactory routine lab number: _____
Unsatisfactory routine collect date: ___/___/___
Chlorinated: Yes_____ No_____
Chlorine Residual:
Total_____ Free_____

3. ☐ **Raw Water Source Sample**
Required for Surface Water, GWI, and some Spring Sources) S
Public Systems must provide Source Number from Water Facilities Inventory (WFI)

4. ☐ **Sample Collected for Information Only**
Construction_____ Repairs_____ Private Residence_____ Other_____

LAB USE ONLY — DRINKING WATER RESULTS — LAB USE ONLY

☐ **Unsatisfactory**
Total Coliform Present **and**
☐ E.coli present ☐ E.coli absent
☐ Fecal coliform present ☐ Fecal coliform absent

☑ **Satisfactory**
Total Coliform Absent

☐ **Replacement Sample Required**

Sample not tested because:
☐ Sample too old (>30 hours)
☐ Improper container
☐ _____

Test unsuitable because:
☐ TNTC
☐ Turbid culture
☐ _____

Bacterial Density Results: Plate Count_____/ml. E.coli_____/100ml.
Total Coliform_____/100ml. Fecal Coliform_____/100ml.

Method Code: MICR - 2600

Date and Time Received: 2-23-06 1155

Date Analyzed: 2-23-06

Date Reported: 2-24-06

05600260 [illegible]
Sample Number (DOH number plus five digits)

Parcel #:

Mason
40-20-00
T23N R4W
Sec 10
NW 1/4

410 North 4th, Shelton, WA 98594, 427-9670 ext. 580

COLIFORM BACTERIA ANALYSIS

DOH Form #331-320 (revised 7/05)

Date Sample Collected	Time Sample Collected	Count:
3 / 27 / 06 (Month Day Year)	3:00 ☐ AM ☑ PM	Mason

Type of Water System (check only one box)
☐ Group A Public ☐ Private Household
☑ Group B Public ☐ Other

Group A and Group B Systems – Provide from Water Facilities Inventory (WFI):
ID# 3 1 5 6 9 0

System Name: Horstene Point

Contact Person: Tom Moore

Day Phone: (360) 426-7053 Cell Phone: ( )

Eve. Phone: ( ) FAX: ( )

Send results to: (Print full name, address, and zip code): Mason

SAMPLE INFORMATION

Sample collected by (name): Tom Fischer

Specific location where sample collected (address or sample site, and type of faucet): Park Points Drive East

Special instructions or comments:

Type of Sample (Mark accurately and completely)

1. ☐ **Routine Distribution Sample**
Provide information below.
Chlorinated: Yes ✓ No
Chlorine Residual: Total Free .17

2. ☐ **Repeat Sample (follow-up to an unsatisfactory sample)**
Provide information below.
Unsatisfactory routine lab number:
Unsatisfactory routine collect date: / /
Chlorinated: Yes No
Chlone Residual:
Total Free

3. ☐ **Raw Water Source Sample**
Required for Surface Water, GWI, and some Spring Sources) S
Public Systems must provide Source Number from Water Facilities Inventory (WFI)

4. ☐ **Sample Collected for Information Only**
Construction Repairs Private Residence Other

LAB USE ONLY — DRINKING WATER RESULTS — LAB USE ONLY

☐ **Unsatisfactory**
Total Coliform Present and
☐ E.coli present ☐ E.coli absent
☐ Fecal coliform present ☐ Fecal coliform absent

☑ **Satisfactory**
Total Coliform Absent

☐ **Replacement Sample Required**

Sample not tested because:
☐ Sample too old (>30 hours)
☐ Improper container
☐

Test unsuitable because:
☐ TNTC
☐ Turbid culture
☐

Bacterial Density Results: Plate Count /ml. E.coli /100ml.
Total Coliform /100ml. Fecal Coliform /100ml.

Method Code: MICR - 2600

Date and Time Received: 3-28-06 0938

Date Analyzed: 3-28-06

Date Reported: 3-29-06

05600439 05600
Sample Number (DOH number plus five digits)

Parcel #:

410-000-010
$18.00
01/06/07

COLIFORM BACTERIA ANALYSIS

Date Sample Collected (Month Day Year)	Time Sample Collected	County
4 / 19 / 06	3 : 34 ☐ AM ☑ PM	Mason

Type of Water System (check only one box)
☐ Group A Public ☐ Private Household
☑ Group B Public ☐ Other _____

Group A and Group B Systems – Provide from Water Facilities Inventory (WFI):
ID# 3 1 5 6 9 0

System Name: Harstene Point

Contact Person: Tom Moore

Day Phone: (360) 426 7771 Cell Phone: ( )

Eve. Phone: ( ) FAX: (360) 426 7053

SAMPLE INFORMATION

Sample collected by (name): Tom Fischer

Specific location where sample collected (address or sample site, and type of faucet): clubhouse sink

Special instructions or comments:

Send results to: (Print full name, address, and zip code):

1. ☑ Routine Distribution Sample
Provide information below.
Chlorinated: Yes ✓ No ____
Chlorine Residual: Total ____ Free 1.19

2. ☐ Repeat Sample (follow-up to an unsatisfactory sample)
Provide information below.
Unsatisfactory routine lab number: ____
Unsatisfactory routine collect date: ___/___/___
Chlorinated: Yes ____ No ____
Chlone Residual: Total ____ Free ____

3. ☐ Raw Water Source Sample
Required for Surface Water, GWI, and some Spring Sources) S
Public Systems must provide Source Number from Water Facilities Inventory (WFI)

4. ☐ Sample Collected for Information Only
Construction ____ Repairs ____ Private Residence ____ Other ____

LAB USE ONLY	DRINKING WATER RESULTS	LAB USE ONLY
☐ Unsatisfactory Total Coliform Present and ☐ E.coli present ☐ E.coli absent ☐ Fecal coliform present ☐ Fecal coliform absent		☑ Satisfactory Total Coliform Absent

☐ Replacement Sample Required

Sample not tested because:
☐ Sample too old (>30 hours)
☐ Improper container
☐ _____

Test unsuitable because:
☐ TNTC
☐ Turbid culture
☐ _____

Bacterial Density Results: Plate Count ____ /ml. E.coli ____ /100ml.
Total Coliform ____ /100ml. Fecal Coliform ____ /100ml.

Method Code: MICR - 2600	Date and Time Received: 4-19-06 1653
Date Analyzed: 4-19-06	Date Reported: 4-20-06
05600611 Sample Number (DOH number plus five digits)	Parcel #:

DOH Form #331-320 (revised 7/05)

M5602 HT WTF 410-200-000 53.30.41.20 $16.00

COLIFORM BACTERIA ANALYSIS

Date Sample Collected (Month Day Year)	Time Sample Collected	County
5 18 06	3 : 00 ☐ AM ☑ PM	Mason

Type of Water System (check only one box)
☐ Group A Public ☐ Private Household
☑ Group B Public ☐ Other

Group A and Group B Systems – Provide from Water Facilities Inventory (WFI):
ID# 3 1 5 6 9 0

System Name: Harstene Point

Contact Person: Tom Moore

Day Phone: ( ) 426 7053 Cell Phone: ( )

Eve. Phone: ( ) FAX: ( ) 426 7053

SAMPLE INFORMATION

Sample collected by (name): Tom Fischer

Specific location where sample collected (address or sample site, and type of faucet): Chesapeake Dr bathroom sink

Special instructions or comments:

Send results to: (Print full name, address, and zip code):

Type of Sample (Must check only one box in #1 through #4 listed below)

1. ☑ **Routine Distribution Sample**
Provide information below.
Chlorinated: Yes X No
Chlorine Residual: Total Free .19

2. ☐ **Repeat Sample (follow-up to an unsatisfactory sample)**
Provide information below.
Unsatisfactory routine lab number:
Unsatisfactory routine collect date: / /
Chlorinated: Yes No
Chlone Residual:
Total Free

3. ☐ **Raw Water Source Sample**
Required for Surface Water, GWI, and some Spring Sources) S
Public Systems must provide Source Number from Water Facilities Inventory (WFI)

4. ☐ **Sample Collected for Information Only**
Construction Repairs Private Residence Other

LAB USE ONLY — DRINKING WATER RESULTS — LAB USE ONLY

☐ **Unsatisfactory**
Total Coliform Present and
☐ E.coli present ☐ E.coli absent
☐ Fecal coliform present ☐ Fecal coliform absent

☒ **Satisfactory**
Total Coliform Absent

☐ **Replacement Sample Required**

Sample not tested because:
☐ Sample too old (>30 hours)
☐ Improper container
☐

Test unsuitable because:
☐ TNTC
☐ Turbid culture
☐

Bacterial Density Results: Plate Count /ml. E.coli /100ml.
Total Coliform /100ml. Fecal Coliform /100ml.

Method Code: MICR - 2600

Date and Time Received: 5-9-06 0930

Date Analyzed: 5-9-06

Date Reported: 5-10-06

05600745 0060074

Sample Number (DOH number plus five digits)

Parcel #:

DOH Form #331-320 (revised 7/05)

MS5203 410-000-016 01160214 00000 0814

410 North 9th, Shelton, WA 98594, 427-9670 ext. 580

COLIFORM BACTERIA ANALYSIS

Date Sample Collected	Time Sample Collected	County
6 / 6 / 06 (Month Day Year)	3 : 30 ☐ AM ☑ PM	Mason

Type of Water System (check only one box)
☑ Group A Public ☐ Private Household
☐ Group B Public ☐ Other

Group A and Group B Systems – Provide from Water Facilities Inventory (WFI):
ID# 3 1 5 6 9 0

System Name: Harstene Point

Contact Person: Tom Moore

Day Phone: ( ) 426-7053 Cell Phone: ( )

Eve Phone: ( ) FAX: ( )

Send results to: (Print full name, address, and zip code):

SAMPLE INFORMATION

Sample collected by (name): Tom Fischer

Specific location where sample collected (address or sample site, and type of faucet): Well # 2

Special instructions or comments:

Type of Sample (must check only one box of #1 through #4 listed below)

1. ☑ **Routine Distribution Sample**
Provide information below.
Chlorinated: Yes ✓ No
Chlorine Residual: Total Free .17

2. ☐ **Repeat Sample (follow-up to an unsatisfactory sample)**
Provide information below.
Unsatisfactory routine lab number:
Unsatisfactory routine collect date: / /
Chlorinated: Yes No
Chlone Residual:
Total Free

3. ☐ **Raw Water Source Sample**
Required for Surface Water, GWI, and some Spring Sources) S
Public Systems must provide Source Number from Water Facilities Inventory (WFI)

4. ☐ **Sample Collected for Information Only**
Construction Repairs Private Residence Other

LAB USE ONLY — DRINKING WATER RESULTS — LAB USE ONLY

☐ **Unsatisfactory**
Total Coliform Present and
☐ E.coli present ☐ E.coli absent
☐ Fecal coliform present ☐ Fecal coliform absent

☑ **Satisfactory**
Total Coliform Absent

☐ **Replacement Sample Required**

Sample not tested because:
☐ Sample too old (>30 hours)
☐ Improper container
☐

Test unsuitable because:
☐ TNTC
☐ Turbid culture
☐

Bacterial Density Results: Plate Count /ml. E.coli /100ml.
Total Coliform /100ml. Fecal Coliform /100ml.

Method Code: MICR - 2600

Date and Time Received: 6-6-06 1615

Date Analyzed: 6-7-06

Date Reported: 6/8/06

Sample Number (DOH number plus five digits): 05600901

Parcel #:

DOH Form #331-320 (revised 7/05)

#1600
410-200-000
824-300-110

COLIFORM BACTERIA ANALYSIS

Date Sample Collected (Month Day Year)	Time Sample Collected	County
7 / 24 / 06	11:29 ☒ AM ☐ PM	Mason

Type of Water System (check only one box)
☒ Group A Public ☐ Private Household
☐ Group B Public ☐ Other_____

Group A and Group B Systems – Provide from Water Facilities Inventory (WFI):
ID# 3 1 5 6 9 D

System Name: Harstene Point

Contact Person: Tom Fischer

Day Phone: (360) 426 7053 Cell Phone: ( ) 490 4655

Eve. Phone: ( ) FAX: ( )

Send results to: (Print full name, address, and zip code):

SAMPLE INFORMATION

Sample collected by (name): Tom Fischer

Specific location where sample collected (address or sample site, and type of faucet): Park Hill Point Dr. We East

Special instructions or comments:

1. ☒ Routine Distribution Sample
Provide information below.
Chlorinated: Yes ✓ No_____
Chlorine Residual: Total_____ Free .21

2. ☐ Repeat Sample (follow-up to an unsatisfactory sample)
Provide information below.
Unsatisfactory routine lab number: _____
Unsatisfactory routine collect date: ___/___/___
Chlorinated: Yes_____ No_____
Chlone Residual:
Total_____ Free_____

3. ☐ Raw Water Source Sample
Required for Surface Water, GWI, and some Spring Sources) S
Public Systems must provide Source Number from Water Facilities Inventory (WFI)

4. ☐ Sample Collected for Information Only
Construction_____ Repairs_____ Private Residence_____ Other_____

LAB USE ONLY — DRINKING WATER RESULTS — LAB USE ONLY

☐ **Unsatisfactory**
Total Coliform Present **and**
☐ E.coli present ☐ E.coli absent
☐ Fecal coliform present ☐ Fecal coliform absent

☒ **Satisfactory**
Total Coliform Absent

☐ **Replacement Sample Required**

Sample not tested because:
☐ Sample too old (>30 hours)
☐ Improper container
☐ _____

Test unsuitable because:
☐ TNTC
☐ Turbid culture
☐ _____

Bacterial Density Results: Plate Count_____/ml. E.coli_____/100ml.
Total Coliform_____/100ml. Fecal Coliform_____/100ml.

Method Code: MICR - 2600
Date and Time Received: 7/24/06 1645
Date Analyzed: 7/24/06
Date Reported: 7/25/06 sxb
0560115 3 0560 3
Sample Number (DOH number plus five digits)
Parcel #:

DOH Form #331-320 (revised 7/05)

WSDOH 410-360-000 (12/98) DOH 1000

Hartstene Pointe Coliform Monitoring Plan

Sample locations and repeat sites are listed below and are shown on the attached map.

Primary Sampling Sites

Name	Address	Months Sampled
X-1	PDW Clubhouse Sink	January, May, September
X-2	Park @ Chelsea Peak Dr Sink	February, June, October
X-3	Marina @ Pro Montory Dr Sink	March, July, November
X-4	Div 8, Lot 22 @ Nantucket Hosebib	April, August, December

Repeat Sampling Sites

Name	Address
R-1A	Well No. 2 Hose Bib
R-1B	Well # 1 Hose Bib
R-1C	299 PD East Hose Bib
R-2A	Treatment Plant Hose Bib
R-2B	Div 4, Lot 33 Hose Bib
R-2C	Div 4, Lot 28 Hose Bib
R-3A	Div 10, Lot 14 Hose Bib
R-3B	Div 10, Lot 11 Hose Bib
R-3C	Marina Restroom
R-4A	Div 8, Lot 20 Hose Bib
R-4B	Div 8, Lot 24 Hose Bib
R-4C	Div 8, Lot 23 Hose Bib

Appendix G

Water Rights Self Assessment

Water Right Self-Assessment

For Existing Water Right(s) Status

Permit Certificate or Claim #	Name of Rightholder or Claimant	Priority Date	Source Name/ Number	Primary or Supplemental	Existing Water Rights		Existing Consumption		Current Water Right Status (Excess/Deficiency)	
					Maximum Instantaneous Flow Rate (Qi)	Maximum Annual Volume (Qa)	Maximum Instantaneous Flow Rate (Qi)	Maximum Annual Volume (Qa)	Maximum Instantaneous Flow Rate (Qi)	Maximum Annual Volume (Qa)
Permits/ Certificates 1.C2-01016C	The Quadrant Corp.	N/A	SO1 Well No. 1	Primary	110	44	75	10.16	30	33.84
2. G2-23123C	The Quadrant Corp.	9/5/1974	SO2 Well No. 2	Primary	150	240	100	68.52	50	161.32
3.										
4.										
Claims 1.										
2.										
3.										
4.										
TOTAL					260	267	175	78.68	80	188.32

Intertie Name/Identifier	Name of Purveyor Providing Water	Existing Limits on Intertie Water Use		Existing Consumption Through Intertie		Current Intertie Supply Status (Excess/Deficiency)	
		Maximum Instantaneous Flow Rate (Qi)	Maximum Annual Volume (Qa)	Maximum Instantaneous Flow Rate (Qi)	Maximum Annual Volume (Qa)	Maximum Instantaneous Flow Rate (Qi)	Maximum Annual Volume (Qa)
1.							
2.							
3.							
4.							
TOTAL	********** ******* ******* **********						

Pending Water Right Application	Name on Permit	Date Submitted	Primary or Supplemental	Pending Water Rights	
				Maximum Instantaneous Flow Rate (Qi) Requested	Maximum Annual Volume (Qa) Requested
1.					
2.					
3.					
4.					

Water Rights Self-Assessment

For Projected Water Right(s) Status

Permit Certificate or Claim #	Name of Rightholder or Claimant	Priority Date	Source Name/ Number	Primary or Supplemental	Existing Water Rights		Forecasted Water Use From Sources (20 Year Demand)		Forecasted Water Right Status (Excess/Deficiency - 20 Yr Demand in Water Right)	
					Maximum Instantaneous Flow Rate (Qi)	Maximum Annual Volume (Qa)	Maximum Instantaneous Flow Rate (Qi)	Maximum Annual Volume (Qa)	Maximum Instantaneous Flow Rate (Qi)	Maximum Annual Volume (Qa)
Permits/ Certificates 1. C2-01016C	The Quadrant Corp.	N/A	SO1 Well No. 1	Primary	110	44	75	12.94	30	31.06
2. G2-23123C	The Quadrant Corp.	9/5/1974	SO2 Well No. 2	Primary	150	240	100	73.31	50	116.69
3.										
4.										
Claims 1.										
2.										
3.										
4.										
TOTAL					260	267	175	86.25	80	180.75

Intertie Name/Identifier	Name of Purveyor Providing Water	Existing Limits on Intertie Water Use		Existing Consumption Through Intertie		Current Intertie Supply Status (Excess/Deficiency)	
		Maximum Instantaneous Flow Rate (Qi)	Maximum Annual Volume (Qa)	Maximum Instantaneous Flow Rate (Qi)	Maximum Annual Volume (Qa)	Maximum Instantaneous Flow Rate (Qi)	Maximum Annual Volume (Qa)
1.							
2.							
3.							
4.							
TOTAL							

Pending Water Right Application	Name on Permit	Date Submitted	Primary or Supplemental	Pending Water Rights	
				Maximum Instantaneous Flow Rate (Qi) Requested	Maximum Annual Volume (Qa) Requested
1.					
2.					
3.					
4.					

Appendix H

Water System Modeling Results

MASON COUNTY FIRE MARSHAL

Mason County Bldg. III 426 W. Cedar
P.O. Box 186 Shelton, Washington 98584
(360) 427-9670 Ext. 273

CODE ENFORCEMENT FIRE INSPECTIONS FIRE INVESTIGATION PUBLIC EDUCATION

July 12, 2008

Tom Moore
Deputy Director
Mason County
Utilities and Waste Management

Re: Hartstene Pointe Water System Plan

Dear Mr. Moore,

Upon review of the fire-flow section of the Draft Hartstene Pointe Water System Plan, this office concurs with the provided fire-flow analysis. I have also determined that this system, while not fully compliant with current International Building Code Fire-Flow Standards throughout the entire system, does meet the requirements of the Mason County Interim Fire-Flow Ordinance # 46-07. Ordinance #46-07 requires any future construction or replacement of public water system facilities will be constructed to meet the current International Building Code fire-flow standards.

Sincerely,

Craig Haugan
Mason County
Fire Marshall

2006 ADD Results

Print Report

		ID	Demand (gpm)	Elevation (ft)	Head (ft)	Pressure (psi)
1		1	0.88	100.00	206.40	46.10
2		10	0.88	100.00	206.30	46.06
3		11	0.88	85.00	206.25	52.54
4		12	0.88	80.00	206.22	54.69
5		13	0.88	38.00	206.20	72.88
6		14	0.88	32.00	206.20	75.48
7		15	0.88	30.00	206.20	76.35
8		16	0.88	22.00	206.20	79.81
9		17	0.88	15.00	206.20	82.84
10		18	0.88	35.00	206.20	74.18
11		19	0.88	38.00	206.19	72.88
12		2	0.88	95.00	206.40	48.27
13		20	0.88	36.00	206.19	73.74
14		21	0.88	36.00	206.18	73.74
15		22	0.88	43.00	206.20	70.71
16		23	0.88	47.00	206.20	68.98
17		24	0.88	52.00	206.22	66.83
18		25	0.88	65.00	206.22	61.19
19		26	0.88	60.00	206.24	63.37
20		27	0.88	75.00	206.30	56.89
21		28	0.88	95.00	206.30	48.23
22		29	0.88	66.00	206.33	60.80
23		3	0.88	122.00	206.40	36.57
24		30	0.88	66.00	206.33	60.81
25		31	0.88	97.00	206.33	47.37
26		32	0.88	64.00	206.40	61.70
27		33	0.88	108.00	206.40	42.64

Print Report

		ID	Demand (gpm)	Elevation (ft)	Head (ft)	Pressure (psi)
28		34	0.88	106.00	206.43	43.52
29		35	0.88	92.00	206.45	49.59
30		36	0.88	75.00	206.45	56.96
31		37	0.88	65.00	206.45	61.29
32		38	0.88	61.00	206.45	63.02
33		39	0.88	50.00	206.44	67.79
34		4	0.88	123.00	206.41	36.14
35		40	0.88	50.00	206.45	67.79
36		42	0.88	106.00	206.43	43.52
37		43	0.88	107.00	206.43	43.08
38		44	0.88	112.00	206.45	40.93
39		45	0.88	125.00	206.45	35.29
40		46	0.88	121.00	206.48	37.04
41		47	0.88	115.00	206.43	39.61
42		5	0.88	122.00	206.41	36.57
43		50	0.88	36.00	206.19	73.74
44		51	0.88	36.00	206.18	73.74
45		52	0.88	38.00	206.19	72.88
46		6	0.88	121.00	206.41	37.01
47		7	0.88	120.00	206.41	37.44
48		8	0.88	121.00	206.40	37.01
49		9	0.88	117.00	206.40	38.74

2006 Fire Flow Scenario

	ID	Static Demand (gpm)	Static Pressure (psi)	Fire-Flow Demand (gpm)	Residual Pressure (psi)	Available Flow @Hydrant (gpm)	Available Flow Pressure (psi)
1	1	1.46	42.83	500.00	-276.81	119.53	20.00
2	51	1.46	70.31	500.00	-434.94	141.95	20.00
3	50	1.46	70.32	500.00	-402.87	147.38	20.00
4	21	1.46	70.32	500.00	-145.31	224.20	20.00
5	39	1.46	64.54	500.00	-126.95	227.56	20.00
6	3	1.46	33.30	500.00	-14.83	246.15	20.00
7	2	1.46	45.00	500.00	-42.94	251.66	20.00
8	45	1.46	32.05	500.00	4.95	321.81	20.00
9	31	1.46	44.06	500.00	-1.93	349.21	20.00
10	20	1.46	70.33	500.00	-7.00	393.39	20.00
11	12	1.46	51.30	500.00	3.78	394.68	20.00
12	11	1.46	49.16	500.00	5.13	396.24	20.00
13	15	1.46	72.94	500.00	-1.72	413.09	20.00
14	22	1.46	67.30	500.00	2.32	418.80	20.00
15	52	1.46	69.47	500.00	1.74	419.58	20.00
16	19	1.46	69.47	500.00	3.14	424.51	20.00
17	17	1.46	79.43	500.00	-0.29	425.09	20.00
18	25	1.46	57.80	500.00	8.32	430.00	20.00
19	13	1.46	69.47	500.00	5.94	435.12	20.00
20	23	1.46	65.58	500.00	7.74	437.80	20.00
21	14	1.46	72.07	500.00	7.81	445.07	20.00
22	18	1.46	70.77	500.00	8.27	445.55	20.00
23	10	1.46	42.72	500.00	16.05	457.25	20.00
24	28	1.46	44.88	500.00	16.10	461.35	20.00
25	16	1.46	76.40	500.00	12.02	465.19	20.00
26	26	1.46	59.99	500.00	15.77	473.48	20.00

2006 Fire Flow Scenario

	ID	Static Demand (gpm)	Static Pressure (psi)	Fire-Flow Demand (gpm)	Residual Pressure (psi)	Available Flow @Hydrant (gpm)	Available Flow Pressure (psi)
27	24	1.46	63.43	500.00	16.26	478.32	20.00
28	38	1.46	59.78	500.00	27.57	562.83	20.00
29	27	1.46	53.55	500.00	26.98	573.15	20.00
30	33	1.46	39.37	500.00	24.68	585.51	20.00
31	37	1.46	58.05	500.00	30.82	602.22	20.00
32	7	1.46	34.17	500.00	25.02	644.61	20.00
33	6	1.46	33.74	500.00	24.93	647.67	20.00
34	29	1.46	57.48	500.00	33.94	653.28	20.00
35	30	1.46	57.49	500.00	35.01	670.67	20.00
36	40	1.46	64.55	500.00	38.53	672.31	20.00
37	8	1.46	33.74	500.00	25.81	689.61	20.00
38	5	1.46	33.30	500.00	25.74	695.89	20.00
39	4	1.46	32.87	500.00	25.75	707.06	20.00
40	9	1.46	35.47	500.00	27.08	714.31	20.01
41	47	1.46	36.36	500.00	31.27	985.60	20.01
42	32	1.46	58.43	500.00	50.01	1,189.02	20.01
43	42	1.46	40.27	500.00	36.14	1,256.21	20.02
44	34	1.46	40.27	500.00	36.14	1,257.22	20.02
45	43	1.46	39.83	500.00	35.84	1,267.80	20.02
46	36	1.46	53.72	500.00	47.49	1,286.00	20.02
47	44	1.46	37.69	500.00	34.34	1,305.36	20.02
48	35	1.46	46.35	500.00	42.58	1,505.14	20.02
49	46	1.46	33.82	500.00	31.88	1,535.69	20.02

2014 Fire Flow Scenario

	ID	Static Demand (gpm)	Static Pressure (psi)	Fire-Flow Demand (gpm)	Residual Pressure (psi)	Available Flow @Hydrant (gpm)	Available Flow Pressure (psi)
1	1	1.91	42.17	500.00	-278.51	117.25	20.00
2	51	1.91	69.50	500.00	-438.56	139.72	20.00
3	50	1.91	69.52	500.00	-406.17	145.19	20.00
4	21	1.91	69.51	500.00	-148.45	219.82	20.00
5	39	1.91	63.92	500.00	-128.13	225.50	20.00
6	3	1.91	32.65	500.00	-16.02	236.78	20.00
7	2	1.91	44.35	500.00	-44.26	246.41	20.00
8	45	1.91	31.44	500.00	4.12	311.00	20.00
9	31	1.91	43.36	500.00	-3.43	339.15	20.00
10	12	1.91	50.52	500.00	1.51	380.76	20.00
11	11	1.91	48.41	500.00	3.06	382.50	20.00
12	20	1.91	69.53	500.00	-9.68	383.61	20.00
13	15	1.91	72.14	500.00	-4.28	403.49	20.00
14	22	1.91	66.51	500.00	-0.22	407.80	20.00
15	52	1.91	68.67	500.00	-0.88	408.73	20.00
16	19	1.91	68.67	500.00	0.51	413.42	20.00
17	17	1.91	78.63	500.00	-2.90	416.07	20.00
18	25	1.91	57.02	500.00	6.04	416.88	20.00
19	13	1.91	68.68	500.00	3.42	424.04	20.00
20	23	1.91	64.79	500.00	5.24	425.68	20.00
21	18	1.91	69.97	500.00	5.68	434.00	20.00
22	14	1.91	71.27	500.00	5.26	434.06	20.00
23	10	1.91	42.00	500.00	14.38	439.19	20.00
24	28	1.91	44.16	500.00	14.43	444.72	20.00
25	16	1.91	75.60	500.00	9.44	454.16	20.00
26	26	1.91	59.23	500.00	13.63	460.01	20.00

Date: Thursday, December 13, 2007, Time: 13:10:10, Page 1

2014 Fire Flow Scenario

	ID	Static Demand (gpm)	Static Pressure (psi)	Fire-Flow Demand (gpm)	Residual Pressure (psi)	Available Flow @Hydrant (gpm)	Available Flow Pressure (psi)
27	24	1.91	62.66	500.00	13.97	464.80	20.00
28	38	1.91	59.16	500.00	26.66	555.96	20.00
29	27	1.91	52.83	500.00	25.29	556.01	20.00
30	33	1.91	38.72	500.00	23.67	567.96	20.00
31	37	1.91	57.43	500.00	29.92	594.47	20.00
32	7	1.91	33.52	500.00	24.02	616.62	20.00
33	6	1.91	33.09	500.00	23.93	618.55	20.00
34	29	1.91	56.78	500.00	32.43	636.84	20.00
35	30	1.91	56.79	500.00	33.55	654.14	20.00
36	8	1.91	33.09	500.00	24.80	657.47	20.00
37	5	1.91	32.66	500.00	24.74	662.68	20.00
38	40	1.91	63.93	500.00	37.70	665.46	20.00
39	4	1.91	32.23	500.00	24.77	672.62	20.00
40	9	1.91	34.82	500.00	26.05	683.98	20.00
41	47	1.91	35.72	500.00	30.36	947.95	20.01
42	32	1.91	57.79	500.00	48.99	1,165.12	20.01
43	42	1.91	39.64	500.00	35.29	1,216.99	20.01
44	34	1.91	39.64	500.00	35.28	1,217.84	20.01
45	43	1.91	39.20	500.00	34.99	1,227.22	20.02
46	44	1.91	37.07	500.00	33.55	1,263.61	20.02
47	36	1.91	53.10	500.00	46.70	1,265.06	20.02
48	35	1.91	45.74	500.00	41.81	1,473.15	20.02
49	46	1.91	33.22	500.00	31.19	1,484.04	20.02

2028 Peak Hour Scenario

		ID	Demand (gpm)	Elevation (ft)	Head (ft)	Pressure (psi)
1		45	4.59	125.00	202.21	33.45
2		4	4.59	123.00	201.35	33.95
3		3	4.59	122.00	201.23	34.33
4		5	4.59	122.00	201.29	34.35
5		8	4.59	121.00	201.24	34.77
6		6	4.59	121.00	201.28	34.79
7		7	4.59	120.00	201.28	35.22
8		46	4.59	121.00	202.79	35.44
9		9	4.59	117.00	201.19	36.48
10		47	4.59	115.00	201.70	37.57
11		44	4.59	112.00	202.21	39.09
12		33	4.59	108.00	201.20	40.39
13		43	4.59	107.00	201.84	41.10
14		34	4.59	106.00	201.84	41.53
15		42	4.59	106.00	201.84	41.53
16		10	4.59	100.00	199.02	42.91
17		1	4.59	100.00	201.09	43.80
18		31	4.59	97.00	199.73	44.51
19		28	4.59	95.00	199.01	45.07
20		2	4.59	95.00	201.18	46.01
21		35	4.59	92.00	202.25	47.77
22		11	4.59	85.00	197.97	48.95
23		12	4.59	80.00	197.40	50.87
24		27	4.59	75.00	199.01	53.73
25		36	4.59	75.00	202.23	55.13
26		25	4.59	65.00	197.40	57.37
27		29	4.59	66.00	199.59	57.88

2028 Peak Hour Scenario

		ID	Demand (gpm)	Elevation (ft)	Head (ft)	Pressure (psi)
28		30	4.59	66.00	199.74	57.95
29		37	4.59	65.00	202.17	59.43
30		32	4.59	64.00	201.25	59.47
31		26	4.59	60.00	197.83	59.72
32		38	4.59	61.00	202.16	61.16
33		24	4.59	52.00	197.39	63.00
34		23	4.59	47.00	196.98	64.99
35		39	4.59	50.00	202.10	65.90
36		40	4.59	50.00	202.22	65.96
37		22	4.59	43.00	196.86	66.67
38		19	4.59	38.00	196.75	68.79
39		52	4.59	38.00	196.76	68.79
40		13	4.59	38.00	196.89	68.85
41		51	4.59	36.00	196.42	69.51
42		21	4.59	36.00	196.53	69.56
43		50	4.59	36.00	196.60	69.59
44		20	4.59	36.00	196.72	69.64
45		18	4.59	35.00	196.78	70.10
46		14	4.59	32.00	196.84	71.42
47		15	4.59	30.00	196.83	72.29
48		16	4.59	22.00	196.79	75.74
49		17	4.59	15.00	196.78	78.77

2028 Fire Flow Scenario

		ID	Static Demand (gpm)	Static Pressure (psi)	Fire-Flow Demand (gpm)	Residual Pressure (psi)	Available Flow @Hydrant (gpm)	Available Flow Pressure (psi)
1		1	2.06	41.77	500.00	-279.27	115.94	20.00
2		51	2.06	69.04	500.00	-439.96	138.67	20.00
3		50	2.06	69.06	500.00	-407.45	144.14	20.00
4		21	2.06	69.05	500.00	-149.69	217.88	20.00
5		39	2.06	63.53	500.00	-128.71	224.30	20.00
6		3	2.06	32.25	500.00	-16.61	231.65	20.00
7		2	2.06	43.94	500.00	-44.89	243.61	20.00
8		45	2.06	31.04	500.00	3.66	304.54	20.00
9		31	2.06	42.93	500.00	-4.12	334.23	20.00
10		12	2.06	50.07	500.00	0.56	374.74	20.00
11		11	2.06	47.96	500.00	2.18	376.44	20.00
12		20	2.06	69.07	500.00	-10.76	379.52	20.00
13		15	2.06	71.68	500.00	-5.33	399.46	20.00
14		22	2.06	66.05	500.00	-1.25	403.18	20.00
15		52	2.06	68.21	500.00	-1.95	404.20	20.00
16		19	2.06	68.21	500.00	-0.55	408.80	20.00
17		25	2.06	56.57	500.00	5.09	411.29	20.00
18		17	2.06	78.17	500.00	-3.96	412.30	20.00
19		13	2.06	68.22	500.00	2.39	419.41	20.00
20		23	2.06	64.33	500.00	4.22	420.62	20.00
21		18	2.06	69.51	500.00	4.62	429.22	20.00
22		14	2.06	70.81	500.00	4.22	429.48	20.00
23		10	2.06	41.56	500.00	13.63	430.96	20.00
24		28	2.06	43.73	500.00	13.68	437.16	20.00
25		16	2.06	75.14	500.00	8.39	449.60	20.00
26		26	2.06	58.78	500.00	12.73	454.25	20.00

2028 Fire Flow Scenario

	ID	Static Demand (gpm)	Static Pressure (psi)	Fire-Flow Demand (gpm)	Residual Pressure (psi)	Available Flow @Hydrant (gpm)	Available Flow Pressure (psi)
27	24	2.06	62.20	500.00	13.01	459.12	20.00
28	27	2.06	52.40	500.00	24.54	548.46	20.00
29	38	2.06	58.77	500.00	26.17	552.22	20.00
30	33	2.06	38.31	500.00	23.15	558.88	20.00
31	37	2.06	57.04	500.00	29.43	590.26	20.00
32	7	2.06	33.12	500.00	23.49	602.27	20.00
33	6	2.06	32.69	500.00	23.40	603.62	20.00
34	29	2.06	56.35	500.00	31.73	629.50	20.00
35	8	2.06	32.68	500.00	24.27	641.16	20.00
36	5	2.06	32.25	500.00	24.22	645.79	20.00
37	30	2.06	56.37	500.00	32.87	646.73	20.00
38	4	2.06	31.83	500.00	24.25	655.03	20.00
39	40	2.06	63.54	500.00	37.24	661.63	20.00
40	9	2.06	34.41	500.00	25.52	668.78	20.00
41	47	2.06	35.33	500.00	29.88	928.85	20.01
42	32	2.06	57.38	500.00	48.47	1,153.90	20.01
43	42	2.06	39.24	500.00	34.82	1,197.32	20.01
44	34	2.06	39.24	500.00	34.81	1,198.08	20.01
45	43	2.06	38.81	500.00	34.52	1,206.85	20.01
46	44	2.06	36.68	500.00	33.10	1,241.81	20.02
47	36	2.06	52.71	500.00	46.25	1,254.13	20.02
48	46	2.06	32.84	500.00	30.77	1,454.93	20.02
49	35	2.06	45.35	500.00	41.37	1,456.50	20.02

Appendix I

Getting Started: Water Use Efficiency Guidebook

Getting Started

Water Use Efficiency Guidebook

July 2007

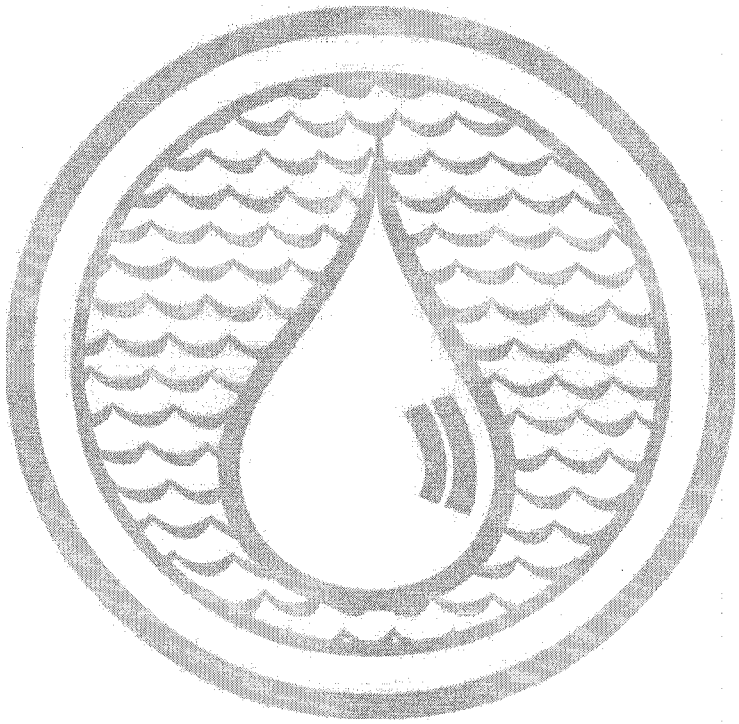

Washington State Department of
Health
Division of Environmental Health
Office of Drinking Water

DOH PUB. #331-375

It's Worth Saving Drinking Water

Getting Started

Water Use Efficiency Guidebook

July 2007

Washington State Department of Health
Division of Environmental Health
Office of Drinking Water

For more information or additional copies of this publication contact:

Training and Outreach Section
Office of Drinking Water
Department of Health
PO Box 47822
Olympia, WA 98504-7822
(360) 236-3164

The Department of Health is an equal opportunity agency. For persons with disabilities, this document is available on request in other formats. To submit a request, please call 1-800-525-0127 (TTY 1-800-833-6388). For additional copies of this publication, call 1-800-521-0323. This and other publications are available at www.doh.wa.gov/ehp/dw

Table of Contents

Acknowledgements
Acronyms and Abbreviations

Chapter 1: Introduction to Water Use Efficiency Requirements

1.1 Intent of This Guidebook 1
1.2 How to Use This Guidebook 1
1.3 Protecting Our Water Resources 2
1.4 Using Water Efficiently 3
1.5 Who is Affected by Water Use Efficiency Requirements 4

Chapter 2: Water Meters

2.1 Overview of the Metering Requirement 7
2.2 Production Meters 7
2.3 Consumption Meters 8
2.4 Intertie Meters 9
2.5 Meter Installation Schedule 9
2.6 Clustered Entities 11
2.7 Selection, Installation, Maintenance, and Operation of Meters 12
2.8 Funding Options for Installing Meters 12

Chapter 3: Data Collection

3.1 Overview of the Data Collection Requirement 13
3.2 Collecting Source Meter Data 14
3.3 Collecting Intertie Data 14
3.4 Collecting Service Meter Data 15
3.5 How to Collect Data 16
3.6 Water Supply Characteristics 16

Chapter 4: Demand Forecasting

4.1 Overview of the Demand Forecast Requirement 21
4.2 Projecting Demand Forecasts: Factors to Consider 21
4.3 Demand Forecast Methods 23

Chapter 5: Water Use Efficiency Program

5.1 Overview of the Water Use Efficiency Program Requirement 25
5.2 Process for Developing a Water Use Efficiency Program 26
5.3 What to Include in Your Water Use Efficiency Program 27
5.4 Evaluate Your Rates 28
5.5 Evaluating Reclaimed Water Opportunities 30
5.6 Evaluation of Water Use Efficiency Measures 30
5.7 What Qualifies as a Water Use Efficiency Measure 32

Chapter 6: Distribution System Leakage

6.1 Overview of the Distribution System Leakage Requirement 35
6.2 Water Loss Terminology 36
6.3 Calculating Distribution System Leakage 37
6.4 Alternative Methods to Calculating Distribution System Leakage 39
6.5 Distribution System Leakage Standard Compliance 39
6.6 Reducing Leakage 40
6.7 Water Loss Control Methods 41

Chapter 7: Goal Setting and the Public Forum

7.1 Overview of the Goal Setting Requirement 43
7.2 Goal Setting Considerations 43
7.3 Goal Setting Authority 45
7.4 Regional Program Goals 46
7.5 Goal Setting Criteria 46
7.6 Setting Goals Through a Public Forum 48

Chapter 8: Annual Performance Report

8.1 Overview of the Annual Performance Reporting Requirement 51
8.2 Preparing Your Annual Performance Report for DOH: What to Include 51
8.3 Submitting the Performance Report 53

Appendix A: Integrating Water Use Efficiency Requirements Into Your Planning Documents

Appendix B: Water Use Efficiency Measures

Appendix C: Water Supply Characteristics and Example

Appendix D: Distribution System Leakage Template, Instructions and Calculation Example

Appendix E: Annual Water Use Efficiency Performance Report Form and Example

Appendix F: Recommended Publications and Web Sites

Appendix G: Water Volume Conversions

Appendix H: Goal Setting Flowchart

Appendix J

Water Conservation Brochures

Indoor Water Conservation

Guideline 1

Did you know: Efficient water use can save you money on water & utility bills, and reduce the costs for sewer and septic services. Use the following household tips in the bathroom, kitchen and laundry room to help protect the environment and save your family money!

Bathroom

Each flush wastes water. Don't use the toilet as a wastebasket.

Check toilets for leaks. Use food coloring or a leak detection tablet in the toilet tank. If color appears in the bowl without flushing, there is a leak that requires immediate attention.

Reduce the water level per flush by installing an ultra low-flow toilet or a toilet displacement device. Use a plastic bottle weighted with pebbles and water. Never use a brick.

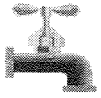

Check faucets and pipes for leaks. A small drip can waste 20 or more gallons of water per day.

Don't let the bathroom sink run while wetting your toothbrush, brushing your teeth or when shaving. Use a glass of water to rinse or clean your razor in a small pool of water.

Install water-efficient showerheads and take shorter showers.

Indoor Water Conservation

Guideline 1

Did you know: Efficient water use can save you money on water & utility bills, and reduce the costs for sewer and septic services. Use the following household tips in the bathroom, kitchen and laundry room to help protect the environment and save your family money!

Bathroom

Each flush wastes water. Don't use the toilet as a wastebasket.

Check toilets for leaks. Use food coloring or a leak detection tablet in the toilet tank. If color appears in the bowl without flushing, there is a leak that requires immediate attention.

Reduce the water level per flush by installing an ultra low-flow toilet or a toilet displacement device. Use a plastic bottle weighted with pebbles and water. Never use a brick.

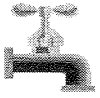

Check faucets and pipes for leaks. A small drip can waste 20 or more gallons of water per day.

Don't let the bathroom sink run while wetting your toothbrush, brushing your teeth or when shaving. Use a glass of water to rinse or clean your razor in a small pool of water.

Install water-efficient showerheads and take shorter showers.

Indoor Water Conservation

Guideline 1

Did you know: Efficient water use can save you money on water & utility bills, and reduce the costs for sewer and septic services. Use the following household tips in the bathroom, kitchen and laundry room to help protect the environment and save your family money!

Bathroom

Each flush wastes water. Don't use the toilet as a wastebasket.

Check toilets for leaks. Use food coloring or a leak detection tablet in the toilet tank. If color appears in the bowl without flushing, there is a leak that requires immediate attention.

Reduce the water level per flush by installing an ultra low-flow toilet or a toilet displacement device. Use a plastic bottle weighted with pebbles and water. Never use a brick.

Check faucets and pipes for leaks. A small drip can waste 20 or more gallons of water per day.

Don't let the bathroom sink run while wetting your toothbrush, brushing your teeth or when shaving. Use a glass of water to rinse or clean your razor in a small pool of water.

Install water-efficient showerheads and take shorter showers.

Kitchen

Only wash dishes when necessary. Turn the dishwasher on only when it is full.

Use both sides of the sink when washing dishes by hand. Use one side to wash and the other side to rinse. Do not wash dishes under a running faucet.

Install low-flow fixtures, then buy and install aerators for every faucet in the house.

Keep a bottle or pitcher of drinking water in the refrigerator. This eliminates letting the tap run while waiting for the water to get cold.

Clean vegetables in a pan of water and not under a running faucet. Water used to clean vegetables can also be used to water houseplants.

In-sink garbage disposal devices use roughly 11.5 gallons of water each day. Try composting organic wastes instead of throwing them away.

Laundry

Pre-rinse clothes only when absolutely necessary.

Use the proper water level, load size selection and water temperature when washing clothes. Consider installing a water efficient washing machine.

More Information

Washington State Department of Health
Office of Drinking Water
P.O. Box 47828 • Olympia, WA 98504-7828
(360) 236-3100 • 1-800-521-0323
http://www.doh.wa.gov/ehp/dw/

DOH PUB. # 331-120-1

Washington State Department of Health

Kitchen

Only wash dishes when necessary. Turn the dishwasher on only when it is full.

Use both sides of the sink when washing dishes by hand. Use one side to wash and the other side to rinse. Do not wash dishes under a running faucet.

Install low-flow fixtures, then buy and install aerators for every faucet in the house.

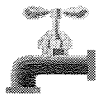

Keep a bottle or pitcher of drinking water in the refrigerator. This eliminates letting the tap run while waiting for the water to get cold.

Clean vegetables in a pan of water and not under a running faucet. Water used to clean vegetables can also be used to water houseplants.

In-sink garbage disposal devices use roughly 11.5 gallons of water each day. Try composting organic wastes instead of throwing them away.

Laundry

Pre-rinse clothes only when absolutely necessary.

Use the proper water level, load size selection and water temperature when washing clothes. Consider installing a water efficient washing machine.

More Information

Washington State Department of Health
Office of Drinking Water
P.O. Box 47828 • Olympia, WA 98504-7828
(360) 236-3100 • 1-800-521-0323
http://www.doh.wa.gov/ehp/dw/

DOH PUB. # 331-120-1

Washington State Department of Health

Kitchen

Only wash dishes when necessary. Turn the dishwasher on only when it is full.

Use both sides of the sink when washing dishes by hand. Use one side to wash and the other side to rinse. Do not wash dishes under a running faucet.

Install low-flow fixtures, then buy and install aerators for every faucet in the house.

Keep a bottle or pitcher of drinking water in the refrigerator. This eliminates letting the tap run while waiting for the water to get cold.

Clean vegetables in a pan of water and not under a running faucet. Water used to clean vegetables can also be used to water houseplants.

In-sink garbage disposal devices use roughly 11.5 gallons of water each day. Try composting organic wastes instead of throwing them away.

Laundry

Pre-rinse clothes only when absolutely necessary.

Use the proper water level, load size selection and water temperature when washing clothes. Consider installing a water efficient washing machine.

More Information

Washington State Department of Health
Office of Drinking Water
P.O. Box 47828 • Olympia, WA 98504-7828
(360) 236-3100 • 1-800-521-0323
http://www.doh.wa.gov/ehp/dw/

DOH PUB. # 331-120-1

Washington State Department of Health

Outdoor Water Conservation

Guideline 2

Did you know: Efficient water use is critical to a healthy and clean environment. Fish, trees and animals depend on wise use of our limited water supplies. Use the following tips to save water (and money) outdoors.

Lawn & Garden

The lawn is getting dry when footprints remain after walking on it (see Guideline 3 - Lawn Watering).

Water in short repeated intervals for best absorption, especially on slopes or compacted soils. Prevent water runoff from your sprinkler system.

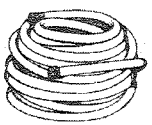

To reduce evaporation, water the lawn in the early morning or evening. Avoid watering during the heat of the day or when it is windy.

Install a trickle or drip irrigation system for a slow, steady supply of water to the plant roots. (See Guideline 7 - Irrigation & Landscaping.)

Water only when needed. Frequency depends on plant and soil type.

Water root areas of your plants to establish hardiness. (See Guideline 6 - Soil Preparation & Planning.)

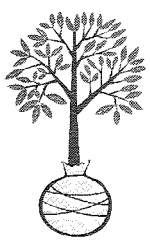

Outdoor Water Conservation

Guideline 2

Did you know: Efficient water use is critical to a healthy and clean environment. Fish, trees and animals depend on wise use of our limited water supplies. Use the following tips to save water (and money) outdoors.

Lawn & Garden

The lawn is getting dry when footprints remain after walking on it (see Guideline 3 - Lawn Watering).

Water in short repeated intervals for best absorption, especially on slopes or compacted soils. Prevent water runoff from your sprinkler system.

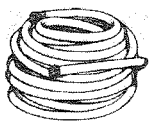

To reduce evaporation, water the lawn in the early morning or evening. Avoid watering during the heat of the day or when it is windy.

Install a trickle or drip irrigation system for a slow, steady supply of water to the plant roots. (See Guideline 7 - Irrigation & Landscaping.)

Water only when needed. Frequency depends on plant and soil type.

Water root areas of your plants to establish hardiness. (See Guideline 6 - Soil Preparation & Planning.)

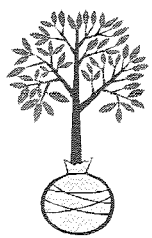

Outdoor Water Conservation

Guideline 2

Did you know: Efficient water use is critical to a healthy and clean environment. Fish, trees and animals depend on wise use of our limited water supplies. Use the following tips to save water (and money) outdoors.

Lawn & Garden

The lawn is getting dry when footprints remain after walking on it (see Guideline 3 - Lawn Watering).

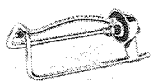

Water in short repeated intervals for best absorption, especially on slopes or compacted soils. Prevent water runoff from your sprinkler system.

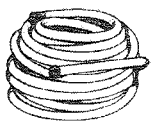

To reduce evaporation, water the lawn in the early morning or evening. Avoid watering during the heat of the day or when it is windy.

Install a trickle or drip irrigation system for a slow, steady supply of water to the plant roots. (See Guideline 7 - Irrigation & Landscaping.)

Water only when needed. Frequency depends on plant and soil type.

Water root areas of your plants to establish hardiness. (See Guideline 6 - Soil Preparation & Planning.)

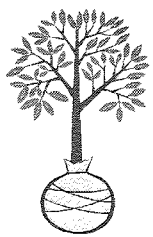

Low or no-water landscaping requires minimal amounts of water, fertilizer and pesticides. This can save you money and will protect the environment.

Place a 2" to 4" layer of mulch around plants and trees to avoid excess evaporation.

Use native and adapted plants when landscaping your yard. These plants usually require less care and water. Consider installing plants that don't require water once they are established for some or all of your yard.

If your lawn is healthy, consider letting your lawn go dormant in the summer. It will turn green again when it rains.

Cleaning

Use a broom to clean walkways and driveways. Do not use the hose. Watering the sidewalk, gutter and street wastes water.

Clean gutters and downspouts manually instead of hosing them down.

Use a hose with a shut-off nozzle along with a bucket of soapy water to wash the car.

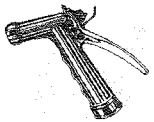

More Information

Washington State Department of Health
Office of Drinking Water
P.O. Box 47828 • Olympia, WA 98504-7828
(360) 236-3100 • 1-800-521-0323
http://www.doh.wa.gov/ehp/dw/

DOH PUB. # 331-120-2

Washington State Department of Health

Low or no-water landscaping requires minimal amounts of water, fertilizer and pesticides. This can save you money and will protect the environment.

Place a 2" to 4" layer of mulch around plants and trees to avoid excess evaporation.

Use native and adapted plants when landscaping your yard. These plants usually require less care and water. Consider installing plants that don't require water once they are established for some or all of your yard.

If your lawn is healthy, consider letting your lawn go dormant in the summer. It will turn green again when it rains.

Cleaning

Use a broom to clean walkways and driveways. Do not use the hose. Watering the sidewalk, gutter and street wastes water.

Clean gutters and downspouts manually instead of hosing them down.

Use a hose with a shut-off nozzle along with a bucket of soapy water to wash the car.

More Information

Washington State Department of Health
Office of Drinking Water
P.O. Box 47828 • Olympia, WA 98504-7828
(360) 236-3100 • 1-800-521-0323
http://www.doh.wa.gov/ehp/dw/

DOH PUB. # 331-120-2

Washington State Department of Health

Low or no-water landscaping requires minimal amounts of water, fertilizer and pesticides. This can save you money and will protect the environment.

Place a 2" to 4" layer of mulch around plants and trees to avoid excess evaporation.

Use native and adapted plants when landscaping your yard. These plants usually require less care and water. Consider installing plants that don't require water once they are established for some or all of your yard.

If your lawn is healthy, consider letting your lawn go dormant in the summer. It will turn green again when it rains.

Cleaning

Use a broom to clean walkways and driveways. Do not use the hose. Watering the sidewalk, gutter and street wastes water.

Clean gutters and downspouts manually instead of hosing them down.

Use a hose with a shut-off nozzle along with a bucket of soapy water to wash the car.

More Information

Washington State Department of Health
Office of Drinking Water
P.O. Box 47828 • Olympia, WA 98504-7828
(360) 236-3100 • 1-800-521-0323
http://www.doh.wa.gov/ehp/dw/

DOH PUB. # 331-120-2

Washington State Department of Health

Lawn Watering

Guideline 3

Did you know: During the summer, water use can more than double due to lawn and garden watering. Preserve the environment, save money, save fish and save water by following these simple steps when watering your lawn.

1. Place three or more flat bottom cans or mugs randomly around your lawn. Inexpensive rain gauges may also be used.

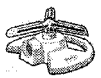

2. Turn on your sprinkler(s) for 15 minutes.

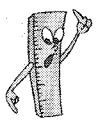

3. Measure and record the depth of water in each can (mug) with a ruler. Determine the average depth of water for all of the cans combined. Notice the uniformity of your water application.

4. Refer to the example & chart on the back to determine the number of minutes you should water each week. Record the times for future reference. (See Guideline 6 - Soil Preparation & Planning for additional information.)

REMEMBER: Your watering practices should be influenced by the weather. Decrease watering time during cool or humid conditions and skip a scheduled watering after a moderate rainfall. This brochure is only a guide. Consult your local nursery, garden center or county extension office for more information.

Lawn Watering

Guideline 3

Did you know: During the summer, water use can more than double due to lawn and garden watering. Preserve the environment, save money, save fish and save water by following these simple steps when watering your lawn.

1. Place three or more flat bottom cans or mugs randomly around your lawn. Inexpensive rain gauges may also be used.

2. Turn on your sprinkler(s) for 15 minutes.

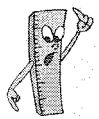

3. Measure and record the depth of water in each can (mug) with a ruler. Determine the average depth of water for all of the cans combined. Notice the uniformity of your water application.

4. Refer to the example & chart on the back to determine the number of minutes you should water each week. Record the times for future reference. (See Guideline 6 - Soil Preparation & Planning for additional information.)

REMEMBER: Your watering practices should be influenced by the weather. Decrease watering time during cool or humid conditions and skip a scheduled watering after a moderate rainfall. This brochure is only a guide. Consult your local nursery, garden center or county extension office for more information.

Lawn Watering

Guideline 3

Did you know: During the summer, water use can more than double due to lawn and garden watering. Preserve the environment, save money, save fish and save water by following these simple steps when watering your lawn.

1. Place three or more flat bottom cans or mugs randomly around your lawn. Inexpensive rain gauges may also be used.

2. Turn on your sprinkler(s) for 15 minutes.

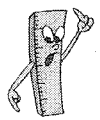

3. Measure and record the depth of water in each can (mug) with a ruler. Determine the average depth of water for all of the cans combined. Notice the uniformity of your water application.

4. Refer to the example & chart on the back to determine the number of minutes you should water each week. Record the times for future reference. (See Guideline 6 - Soil Preparation & Planning for additional information.)

REMEMBER: Your watering practices should be influenced by the weather. Decrease watering time during cool or humid conditions and skip a scheduled watering after a moderate rainfall. This brochure is only a guide. Consult your local nursery, garden center or county extension office for more information.

Example
(Season is Spring)

CAN # 1	1/2 inch	12.7 mm
CAN # 2	1/4 inch	6.35 mm
CAN # 3	1/2 inch	12.7 mm
CAN # 4	1/4 inch	6.35 mm
TOTAL	1.5 inches	38.10 mm
AVERAGE *	1.50 / 4 = 3/8 inch (approx.)	38.10 / 4 = 9.52 mm

WATERING TIME: 20 minutes

* Average equals total amount of water in all cans divided by the total number of cans.
* One inch of water a week, including rainfall, is all your lawn needs.

Lawn watering depth chart

Average Depth in Test Can		Minutes to Water Once Each Week in		
Inches	Millimeters	Spring	Summer	Fall
1/8	3.2	60	120	48
¼	6.3	30	60	24
3/8	9.5	20	40	16
½	12.7	15	30	12
5/8	15.9	12	24	9.5
¾	19.1	10	20	8
1.0	25.4	8	16	6.5
1-1/8	28.6	6	13	5

More Information

Washington State Department of Health
Office of Drinking Water
P.O. Box 47828 • Olympia, WA 98504-7828
(360) 236-3100 • 1-800-521-0323
http://www.doh.wa.gov/ehp/dw/

DOH PUB. # 331-120-3

Washington State Department of Health

Example
(Season is Spring)

CAN # 1	1/2 inch	12.7 mm
CAN # 2	1/4 inch	6.35 mm
CAN # 3	1/2 inch	12.7 mm
CAN # 4	1/4 inch	6.35 mm
TOTAL	1.5 inches	38.10 mm
AVERAGE *	1.50 / 4 = 3/8 inch (approx.)	38.10 / 4 = 9.52 mm

WATERING TIME: 20 minutes

* Average equals total amount of water in all cans divided by the total number of cans.
* One inch of water a week, including rainfall, is all your lawn needs.

Lawn watering depth chart

Average Depth in Test Can		Minutes to Water Once Each Week in		
Inches	Millimeters	Spring	Summer	Fall
1/8	3.2	60	120	48
¼	6.3	30	60	24
3/8	9.5	20	40	16
½	12.7	15	30	12
5/8	15.9	12	24	9.5
¾	19.1	10	20	8
1.0	25.4	8	16	6.5
1-1/8	28.6	6	13	5

More Information

Washington State Department of Health
Office of Drinking Water
P.O. Box 47828 • Olympia, WA 98504-7828
(360) 236-3100 • 1-800-521-0323
http://www.doh.wa.gov/ehp/dw/

DOH PUB. # 331-120-3

Washington State Department of Health

Example
(Season is Spring)

CAN # 1	1/2 inch	12.7 mm
CAN # 2	1/4 inch	6.35 mm
CAN # 3	1/2 inch	12.7 mm
CAN # 4	1/4 inch	6.35 mm
TOTAL	1.5 inches	38.10 mm
AVERAGE *	1.50 / 4 = 3/8 inch (approx.)	38.10 / 4 = 9.52 mm

WATERING TIME: 20 minutes

* Average equals total amount of water in all cans divided by the total number of cans.
* One inch of water a week, including rainfall, is all your lawn needs.

Lawn watering depth chart

Average Depth in Test Can		Minutes to Water Once Each Week in		
Inches	Millimeters	Spring	Summer	Fall
1/8	3.2	60	120	48
¼	6.3	30	60	24
3/8	9.5	20	40	16
½	12.7	15	30	12
5/8	15.9	12	24	9.5
¾	19.1	10	20	8
1.0	25.4	8	16	6.5
1-1/8	28.6	6	13	5

More Information

Washington State Department of Health
Office of Drinking Water
P.O. Box 47828 • Olympia, WA 98504-7828
(360) 236-3100 • 1-800-521-0323
http://www.doh.wa.gov/ehp/dw/

DOH PUB. # 331-120-3

Washington State Department of Health

Indoor Water Audit

Guideline 4

Did you know: Every time you flush the toilet unnecessarily or leave the sink running, you are wasting water. Find out how many gallons of water your house uses, then save water and money by following these simple steps.

1. Read your water meter before using any water. (See Guideline 5 - Meter Reading & Leak Repair.)
2. Keep track of all indoor water using activities for one day (24 hours). See example on back.
3. Determine the number of gallons each water using activity typically needs from the chart below.
4. Read your water meter after one day (24 hours) and verify your calculations. (For water meters measuring in cubic feet - 1 cubic foot of water = 7.5 gallons.)
5. Calculate the per-person consumption rate. (Total gallons of water used divided by total people living in home.)
6. Use DOH Water Saving Guidelines 1 through 8 to reduce your water use by 10% (or more) and save money at the same time.

Water Use Activity Chart

(gallons per use)

Toilet		***Washing Machine***	
Conventional	5.0	Conventional	37.0
Low-Flow	3.5	Wash Recycle	26.0
Ultra Low-Flow	1.6	Front Load	21.0
		X-Axis	17.5
Faucets		***Showerheads***	
Conventional	3.0	Conventional	5.0
Low-Flow	2.5	Low-Flow	2.5

Indoor Water Audit

Guideline 4

Did you know: Every time you flush the toilet unnecessarily or leave the sink running, you are wasting water. Find out how many gallons of water your house uses, then save water and money by following these simple steps.

1. Read your water meter before using any water. (See Guideline 5 - Meter Reading & Leak Repair.)
2. Keep track of all indoor water using activities for one day (24 hours). See example on back.
3. Determine the number of gallons each water using activity typically needs from the chart below.
4. Read your water meter after one day (24 hours) and verify your calculations. (For water meters measuring in cubic feet - 1 cubic foot of water = 7.5 gallons.)
5. Calculate the per-person consumption rate. (Total gallons of water used divided by total people living in home.)
6. Use DOH Water Saving Guidelines 1 through 8 to reduce your water use by 10% (or more) and save money at the same time.

Water Use Activity Chart

(gallons per use)

Toilet		***Washing Machine***	
Conventional	5.0	Conventional	37.0
Low-Flow	3.5	Wash Recycle	26.0
Ultra Low-Flow	1.6	Front Load	21.0
		X-Axis	17.5
Faucets		***Showerheads***	
Conventional	3.0	Conventional	5.0
Low-Flow	2.5	Low-Flow	2.5

Indoor Water Audit

Guideline 4

Did you know: Every time you flush the toilet unnecessarily or leave the sink running, you are wasting water. Find out how many gallons of water your house uses, then save water and money by following these simple steps.

1. Read your water meter before using any water. (See Guideline 5 - Meter Reading & Leak Repair.)
2. Keep track of all indoor water using activities for one day (24 hours). See example on back.
3. Determine the number of gallons each water using activity typically needs from the chart below.
4. Read your water meter after one day (24 hours) and verify your calculations. (For water meters measuring in cubic feet - 1 cubic foot of water = 7.5 gallons.)
5. Calculate the per-person consumption rate. (Total gallons of water used divided by total people living in home.)
6. Use DOH Water Saving Guidelines 1 through 8 to reduce your water use by 10% (or more) and save money at the same time.

Water Use Activity Chart

(gallons per use)

Toilet		***Washing Machine***	
Conventional	5.0	Conventional	37.0
Low-Flow	3.5	Wash Recycle	26.0
Ultra Low-Flow	1.6	Front Load	21.0
		X-Axis	17.5
Faucets		***Showerheads***	
Conventional	3.0	Conventional	5.0
Low-Flow	2.5	Low-Flow	2.5

Example

Beginning Meter Reading 1000

Bathroom:					
Toilet	18 flushes	X	5 gal/flush	=	90 gal
Sink	6 minutes	X	3 gal/min	=	18 gal
Shower	25 minutes	X	5 gal/min	=	125 gal
Kitchen:					
Sink	6 minutes	X	3 gal/min	=	18 gal
Dishwasher	1 cycle	X	15 gal/use	=	15 gal
Other:					
Laundry	1 cycle	X	37 gal/use	=	37 gal

Total Use *303 gal*

Per-person Rate 303 gal / 3 people = 101 gallons per person

*Final Meter Reading** *1303*

*If the beginning meter reading plus total use does not equal the final meter reading, you either used water outdoors and/or you may have a leak.

Worksheet

Beginning Meter Reading _____

Bathroom:					
Toilet	__ flushes	X	__ gal/flush	=	__ gal
Sink	__ minutes	X	__ gal/min	=	__ gal
Shower	__ minutes	X	__ gal/min	=	__ gal
Kitchen:					
Sink	__ minutes	X	__ gal/min	=	__ gal
Dishwasher	__ cycle	X	__ gal/use	=	__ gal
Other:					
Laundry	__ cycle	X	__ gal/use	=	__ gal

Total Use ____ *gal*

Per-person Rate ____ gal / ____ people = ____ gallons per person

*Final Meter Reading** _____

More Information

(360) 236-3100 • 1-800-521-0323

http://www.doh.wa.gov/ehp/dw/

DOH PUB. # 331-120-4

Washington State Department of Health

Example

Beginning Meter Reading 1000

Bathroom:					
Toilet	18 flushes	X	5 gal/flush	=	90 gal
Sink	6 minutes	X	3 gal/min	=	18 gal
Shower	25 minutes	X	5 gal/min	=	125 gal
Kitchen:					
Sink	6 minutes	X	3 gal/min	=	18 gal
Dishwasher	1 cycle	X	15 gal/use	=	15 gal
Other:					
Laundry	1 cycle	X	37 gal/use	=	37 gal

Total Use *303 gal*

Per-person Rate 303 gal / 3 people = 101 gallons per person

*Final Meter Reading** *1303*

*If the beginning meter reading plus total use does not equal the final meter reading, you either used water outdoors and/or you may have a leak.

Worksheet

Beginning Meter Reading _____

Bathroom:					
Toilet	__ flushes	X	__ gal/flush	=	__ gal
Sink	__ minutes	X	__ gal/min	=	__ gal
Shower	__ minutes	X	__ gal/min	=	__ gal
Kitchen:					
Sink	__ minutes	X	__ gal/min	=	__ gal
Dishwasher	__ cycle	X	__ gal/use	=	__ gal
Other:					
Laundry	__ cycle	X	__ gal/use	=	__ gal

Total Use ____ *gal*

Per-person Rate ____ gal / ____ people = ____ gallons per person

*Final Meter Reading** _____

More Information

(360) 236-3100 • 1-800-521-0323

http://www.doh.wa.gov/ehp/dw/

DOH PUB. # 331-120-4

Washington State Department of Health

Example

Beginning Meter Reading 1000

Bathroom:					
Toilet	18 flushes	X	5 gal/flush	=	90 gal
Sink	6 minutes	X	3 gal/min	=	18 gal
Shower	25 minutes	X	5 gal/min	=	125 gal
Kitchen:					
Sink	6 minutes	X	3 gal/min	=	18 gal
Dishwasher	1 cycle	X	15 gal/use	=	15 gal
Other:					
Laundry	1 cycle	X	37 gal/use	=	37 gal

Total Use *303 gal*

Per-person Rate 303 gal / 3 people = 101 gallons per person

*Final Meter Reading** *1303*

*If the beginning meter reading plus total use does not equal the final meter reading, you either used water outdoors and/or you may have a leak.

Worksheet

Beginning Meter Reading _____

Bathroom:					
Toilet	__ flushes	X	__ gal/flush	=	__ gal
Sink	__ minutes	X	__ gal/min	=	__ gal
Shower	__ minutes	X	__ gal/min	=	__ gal
Kitchen:					
Sink	__ minutes	X	__ gal/min	=	__ gal
Dishwasher	__ cycle	X	__ gal/use	=	__ gal
Other:					
Laundry	__ cycle	X	__ gal/use	=	__ gal

Total Use ____ *gal*

Per-person Rate ____ gal / ____ people = ____ gallons per person

*Final Meter Reading** _____

More Information

(360) 236-3100 • 1-800-521-0323

http://www.doh.wa.gov/ehp/dw/

DOH PUB. # 331-120-4

Washington State Department of Health

Meter Reading & Leak Repair

Guideline 5

How to read a water meter

Some meters read straight across like the odometer on your car. Remember that your meter is never reset.

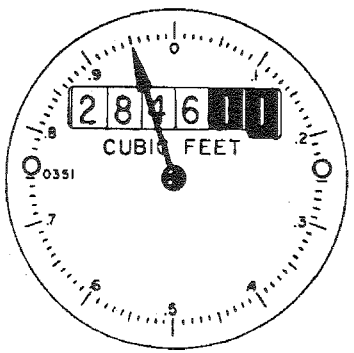

Some meters are circular with five or six dials. Read each dial clockwise, starting at the 100,000 dial. If a pointer is between two figures, read the lower number.

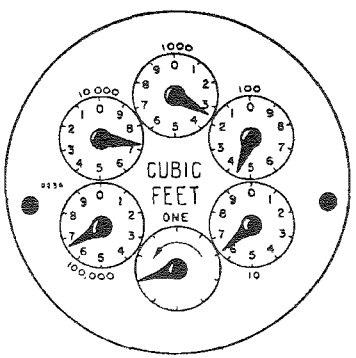

Meter Reading & Leak Repair

Guideline 5

How to read a water meter

Some meters read straight across like the odometer on your car. Remember that your meter is never reset.

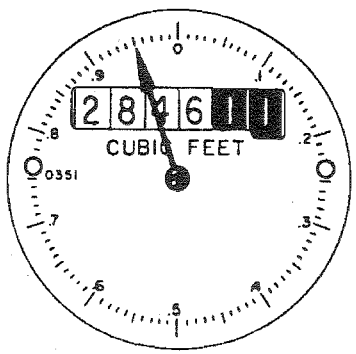

Some meters are circular with five or six dials. Read each dial clockwise, starting at the 100,000 dial. If a pointer is between two figures, read the lower number.

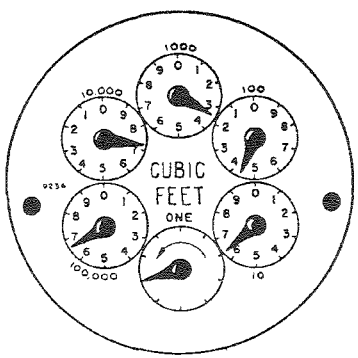

Meter Reading & Leak Repair

Guideline 5

How to read a water meter

Some meters read straight across like the odometer on your car. Remember that your meter is never reset.

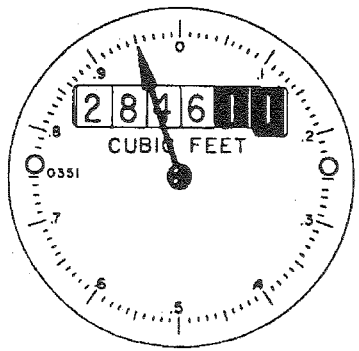

Some meters are circular with five or six dials. Read each dial clockwise, starting at the 100,000 dial. If a pointer is between two figures, read the lower number.

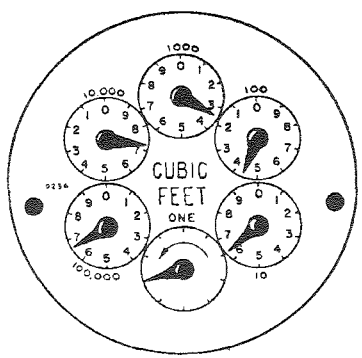

Did you know: A single dripping faucet can waste far more water in a single day than one person needs for drinking in an entire week. Conserve water and save money by finding and fixing leaks.

How to use your water meter to check for leaks

1. Locate your water meter. It is usually found in a meter box in a small concrete vault near the street. (Contact you local water utility if you need assistance locating your water meter.)
2. Turn off all water using appliances in the home. This includes all indoor and outdoor faucets.
3. Check and record the current meter reading.
4. Wait 15 minutes (minimum) although overnight is better. **Remember, do not use any water while you are waiting!**
5. Read the water meter again. If the reading has changed, then you have a leak that requires immediate attention.

How to fix a leak

Many leaks (dripping faucets or showerheads) are caused by worn washers which are easy to fix. Your local hardware, plumbing supply or home improvement store will have the correct parts and complete do-it-yourself instructions.

If replacing the washer does not work or the problem is more complicated, contact a certified plumber for assistance.

TIP: Locate the master water supply valve and label it. The master supply valve can then be easily turned off in case of a leak or broken pipe.

More Information

Office of Drinking Water
(360) 236-3100 • 1-800-521-0323
http://www.doh.wa.gov/ehp/dw/

DOH PUB. # 331-120-5

Washington State Department of Health

Did you know: A single dripping faucet can waste far more water in a single day than one person needs for drinking in an entire week. Conserve water and save money by finding and fixing leaks.

How to use your water meter to check for leaks

1. Locate your water meter. It is usually found in a meter box in a small concrete vault near the street. (Contact you local water utility if you need assistance locating your water meter.)
2. Turn off all water using appliances in the home. This includes all indoor and outdoor faucets.
3. Check and record the current meter reading.
4. Wait 15 minutes (minimum) although overnight is better. **Remember, do not use any water while you are waiting!**
5. Read the water meter again. If the reading has changed, then you have a leak that requires immediate attention.

How to fix a leak

Many leaks (dripping faucets or showerheads) are caused by worn washers which are easy to fix. Your local hardware, plumbing supply or home improvement store will have the correct parts and complete do-it-yourself instructions.

If replacing the washer does not work or the problem is more complicated, contact a certified plumber for assistance.

TIP: Locate the master water supply valve and label it. The master supply valve can then be easily turned off in case of a leak or broken pipe.

More Information

Office of Drinking Water
(360) 236-3100 • 1-800-521-0323
http://www.doh.wa.gov/ehp/dw/

DOH PUB. # 331-120-5

Washington State Department of Health

Did you know: A single dripping faucet can waste far more water in a single day than one person needs for drinking in an entire week. Conserve water and save money by finding and fixing leaks.

How to use your water meter to check for leaks

1. Locate your water meter. It is usually found in a meter box in a small concrete vault near the street. (Contact you local water utility if you need assistance locating your water meter.)
2. Turn off all water using appliances in the home. This includes all indoor and outdoor faucets.
3. Check and record the current meter reading.
4. Wait 15 minutes (minimum) although overnight is better. **Remember, do not use any water while you are waiting!**
5. Read the water meter again. If the reading has changed, then you have a leak that requires immediate attention.

How to fix a leak

Many leaks (dripping faucets or showerheads) are caused by worn washers which are easy to fix. Your local hardware, plumbing supply or home improvement store will have the correct parts and complete do-it-yourself instructions.

If replacing the washer does not work or the problem is more complicated, contact a certified plumber for assistance.

TIP: Locate the master water supply valve and label it. The master supply valve can then be easily turned off in case of a leak or broken pipe.

More Information

Office of Drinking Water
(360) 236-3100 • 1-800-521-0323
http://www.doh.wa.gov/ehp/dw/

DOH PUB. # 331-120-5

Washington State Department of Health

Soil Preparation & Planning

Guideline 6

Did you know: If you take the time to plant native or adapted plants and properly prepare your soil, it will reduce water use, save you money and reduce the time you spend on lawn & garden maintenance.

What kind of soil do you have?

Contact your local conservation district to test your soil or perform the following test for an estimate.

When the soil is moist, pickup a handful and squeeze it tightly in your hand. Next, try to pinch the soil into a ribbon.

1. If the soil forms a ribbon up to 2" long, you have a clay soil.
2. If the soil forms a ribbon only 1" long, you have a loam soil.
3. If the soil falls apart easily and won't make a ribbon, then you have a sandy soil.

Add 1" to 2" organic matter as a surface mulch to improve overall soil quality. Plants will be healthier because the soil holds more nutrients and water. Plants will require less water and you will save water and money.

Organic matter is available in many forms (compost, leaf mold, bark, wood chips, aged manure, shredded leaves, etc.) and may be found at your local nursery or home & garden center.

Soil Preparation & Planning

Guideline 6

Did you know: If you take the time to plant native or adapted plants and properly prepare your soil, it will reduce water use, save you money and reduce the time you spend on lawn & garden maintenance.

What kind of soil do you have?

Contact your local conservation district to test your soil or perform the following test for an estimate.

When the soil is moist, pickup a handful and squeeze it tightly in your hand. Next, try to pinch the soil into a ribbon.

1. If the soil forms a ribbon up to 2" long, you have a clay soil.
2. If the soil forms a ribbon only 1" long, you have a loam soil.
3. If the soil falls apart easily and won't make a ribbon, then you have a sandy soil.

Add 1" to 2" organic matter as a surface mulch to improve overall soil quality. Plants will be healthier because the soil holds more nutrients and water. Plants will require less water and you will save water and money.

Organic matter is available in many forms (compost, leaf mold, bark, wood chips, aged manure, shredded leaves, etc.) and may be found at your local nursery or home & garden center.

Soil Preparation & Planning

Guideline 6

Did you know: If you take the time to plant native or adapted plants and properly prepare your soil, it will reduce water use, save you money and reduce the time you spend on lawn & garden maintenance.

What kind of soil do you have?

Contact your local conservation district to test your soil or perform the following test for an estimate.

When the soil is moist, pickup a handful and squeeze it tightly in your hand. Next, try to pinch the soil into a ribbon.

1. If the soil forms a ribbon up to 2" long, you have a clay soil.
2. If the soil forms a ribbon only 1" long, you have a loam soil.
3. If the soil falls apart easily and won't make a ribbon, then you have a sandy soil.

Add 1" to 2" organic matter as a surface mulch to improve overall soil quality. Plants will be healthier because the soil holds more nutrients and water. Plants will require less water and you will save water and money.

Organic matter is available in many forms (compost, leaf mold, bark, wood chips, aged manure, shredded leaves, etc.) and may be found at your local nursery or home & garden center.

Seven steps to a water efficient yard and garden

1. PLAN FIRST, PLANT SECOND. Draw a scale picture of your home and yard. Consult a professional landscape architect, master gardener or local nursery for advice. This will allow you to implement water efficient yard & garden principles that will save you time and money.

2. SMALLER LAWNS. Lawns are the largest water user in most yards. Before planting, contact your local nursery to determine the proper variety of grass to use. Only plant lawns where they are truly needed (i.e., play areas).

3. SOIL IMPROVEMENT. Determine your soil type and nutrient needs. Adding organic matter will improve overall soil quality and reduce water and fertilizer needs.

4. WATER WISELY. Use efficient watering systems such as sprinklers for grass and drip, spray or bubble delivery systems for shrubs and ground covers. Make sure your irrigation system is adjusted for seasonal differences in water demand and that it is working properly.

5. USE MULCH. Placing mulch over the soil will help cool the soil, reduce weed growth, slow erosion and minimize water evaporation.

6. RIGHT PLANT, RIGHT PLACE. Contact your local nursery, master gardener, or home improvement center for information on low water using and drought resistent plants appropriate to our climate. Plants with similar water needs should be placed together to maximize water efficiency and to minimize cost. Once established, they will use less water.

7. MAINTENANCE. Regularly weed your yard & garden since weeds compete for the same water that your grass & plants use. Regular maintenance will keep your water bill low and also save you time.

More Information

(360) 236-3100 • 1-800-521-0323
http://www.doh.wa.gov/ehp/dw/

DOH PUB. # 331-120-6

Washington State Department of Health

Seven steps to a water efficient yard and garden

1. PLAN FIRST, PLANT SECOND. Draw a scale picture of your home and yard. Consult a professional landscape architect, master gardener or local nursery for advice. This will allow you to implement water efficient yard & garden principles that will save you time and money.

2. SMALLER LAWNS. Lawns are the largest water user in most yards. Before planting, contact your local nursery to determine the proper variety of grass to use. Only plant lawns where they are truly needed (i.e., play areas).

3. SOIL IMPROVEMENT. Determine your soil type and nutrient needs. Adding organic matter will improve overall soil quality and reduce water and fertilizer needs.

4. WATER WISELY. Use efficient watering systems such as sprinklers for grass and drip, spray or bubble delivery systems for shrubs and ground covers. Make sure your irrigation system is adjusted for seasonal differences in water demand and that it is working properly.

5. USE MULCH. Placing mulch over the soil will help cool the soil, reduce weed growth, slow erosion and minimize water evaporation.

6. RIGHT PLANT, RIGHT PLACE. Contact your local nursery, master gardener, or home improvement center for information on low water using and drought resistent plants appropriate to our climate. Plants with similar water needs should be placed together to maximize water efficiency and to minimize cost. Once established, they will use less water.

7. MAINTENANCE. Regularly weed your yard & garden since weeds compete for the same water that your grass & plants use. Regular maintenance will keep your water bill low and also save you time.

More Information

(360) 236-3100 • 1-800-521-0323
http://www.doh.wa.gov/ehp/dw/

DOH PUB. # 331-120-6

Washington State Department of Health

Seven steps to a water efficient yard and garden

1. PLAN FIRST, PLANT SECOND. Draw a scale picture of your home and yard. Consult a professional landscape architect, master gardener or local nursery for advice. This will allow you to implement water efficient yard & garden principles that will save you time and money.

2. SMALLER LAWNS. Lawns are the largest water user in most yards. Before planting, contact your local nursery to determine the proper variety of grass to use. Only plant lawns where they are truly needed (i.e., play areas).

3. SOIL IMPROVEMENT. Determine your soil type and nutrient needs. Adding organic matter will improve overall soil quality and reduce water and fertilizer needs.

4. WATER WISELY. Use efficient watering systems such as sprinklers for grass and drip, spray or bubble delivery systems for shrubs and ground covers. Make sure your irrigation system is adjusted for seasonal differences in water demand and that it is working properly.

5. USE MULCH. Placing mulch over the soil will help cool the soil, reduce weed growth, slow erosion and minimize water evaporation.

6. RIGHT PLANT, RIGHT PLACE. Contact your local nursery, master gardener, or home improvement center for information on low water using and drought resistent plants appropriate to our climate. Plants with similar water needs should be placed together to maximize water efficiency and to minimize cost. Once established, they will use less water.

7. MAINTENANCE. Regularly weed your yard & garden since weeds compete for the same water that your grass & plants use. Regular maintenance will keep your water bill low and also save you time.

More Information

(360) 236-3100 • 1-800-521-0323
http://www.doh.wa.gov/ehp/dw/

DOH PUB. # 331-120-6

Washington State Department of Health

Irrigation & Landscaping

Guideline 7

Did you know: Gardening professionals agree that most lawns and yards receive more water than they need. Over-watering creates run-off that carries toxic fertilizers and pesticides into our streams. This is not only harmful to wildlife and your plants, it wastes water and money too! The following tips will help protect the environment, keep your yard healthy, and save you money on your water bill.

General

1. Apply water only as fast as the soil can absorb it.
2. Water in the evening or early morning when evaporation is least likely to occur. Drip irrigation may be used during the day with little water lost from evaporation. Do not water when it is windy.
3. Water only once a week. Weekly watering should be sufficient. Water less often if your plants need less moisture (see Guideline 3 - Lawn Watering).

Irrigation and Sprinklers

1. When landscaping, a properly designed and installed irrigation system should be included as a water conservation tool. Automated irrigation systems offer the ultimate in both control and distribution of water over other watering systems.
2. Keep your sprinkler system in good repair. Fix leaks and adjust the sprinkler heads to eliminate over-spray onto paved areas or buildings. Investigate any source of unusual runoff or puddling.

Irrigation & Landscaping

Guideline 7

Did you know: Gardening professionals agree that most lawns and yards receive more water than they need. Over-watering creates run-off that carries toxic fertilizers and pesticides into our streams. This is not only harmful to wildlife and your plants, it wastes water and money too! The following tips will help protect the environment, keep your yard healthy, and save you money on your water bill.

General

1. Apply water only as fast as the soil can absorb it.
2. Water in the evening or early morning when evaporation is least likely to occur. Drip irrigation may be used during the day with little water lost from evaporation. Do not water when it is windy.
3. Water only once a week. Weekly watering should be sufficient. Water less often if your plants need less moisture (see Guideline 3 - Lawn Watering).

Irrigation and Sprinklers

1. When landscaping, a properly designed and installed irrigation system should be included as a water conservation tool. Automated irrigation systems offer the ultimate in both control and distribution of water over other watering systems.
2. Keep your sprinkler system in good repair. Fix leaks and adjust the sprinkler heads to eliminate over-spray onto paved areas or buildings. Investigate any source of unusual runoff or puddling.

Irrigation & Landscaping

Guideline 7

Did you know: Gardening professionals agree that most lawns and yards receive more water than they need. Over-watering creates run-off that carries toxic fertilizers and pesticides into our streams. This is not only harmful to wildlife and your plants, it wastes water and money too! The following tips will help protect the environment, keep your yard healthy, and save you money on your water bill.

General

1. Apply water only as fast as the soil can absorb it.
2. Water in the evening or early morning when evaporation is least likely to occur. Drip irrigation may be used during the day with little water lost from evaporation. Do not water when it is windy.
3. Water only once a week. Weekly watering should be sufficient. Water less often if your plants need less moisture (see Guideline 3 - Lawn Watering).

Irrigation and Sprinklers

1. When landscaping, a properly designed and installed irrigation system should be included as a water conservation tool. Automated irrigation systems offer the ultimate in both control and distribution of water over other watering systems.
2. Keep your sprinkler system in good repair. Fix leaks and adjust the sprinkler heads to eliminate over-spray onto paved areas or buildings. Investigate any source of unusual runoff or puddling.

3. Turn off your sprinkler system at the first sign of saturation or runoff to allow the water to soak in. Water again in an hour or two if needed.

4. Make sure the controller of your automated sprinkler system is properly set to achieve minimum watering levels.

Landscaping

1. Consider alternate landscaping practices. Reduce turf area or use groundcovers and/or mulches instead of turf. Generally, groundcovers use less water than turf areas.
2. Use low water using turf varieties. Consult your county extension office or local nursery to identify low water using turf varieties for your area.
3. Aerate to reduce thatch (dead grass) buildup in turf areas in spring or fall. Thatch restricts penetration of water, air and nutrients. Aeration will also increase water penetration in compacted soils.
4. Consider using organic fertilizer. Consult a nursery or landscape professional for a well balanced fertilizer program.
5. Spot spray weeds as needed and consider an integrated pest management program to control bugs and/or disease.
6. Use mulches such as bark compost to help planting beds retain moisture.
7. Consider water consumption when selecting plants. Some plants use more water than others. Consult a good gardening book or your local nursery to determine which low water using plants are correct for your area.
8. Plant placement is important. Remember, right plant, right place! Shade loving plants don't do well if placed in the sun and will require excessive watering to survive. Place plants with similar water needs in common areas so all can benefit from the same application of water.

http://www.doh.wa.gov/ehp/dw/

3. Turn off your sprinkler system at the first sign of saturation or runoff to allow the water to soak in. Water again in an hour or two if needed.

4. Make sure the controller of your automated sprinkler system is properly set to achieve minimum watering levels.

Landscaping

1. Consider alternate landscaping practices. Reduce turf area or use groundcovers and/or mulches instead of turf. Generally, groundcovers use less water than turf areas.
2. Use low water using turf varieties. Consult your county extension office or local nursery to identify low water using turf varieties for your area.
3. Aerate to reduce thatch (dead grass) buildup in turf areas in spring or fall. Thatch restricts penetration of water, air and nutrients. Aeration will also increase water penetration in compacted soils.
4. Consider using organic fertilizer. Consult a nursery or landscape professional for a well balanced fertilizer program.
5. Spot spray weeds as needed and consider an integrated pest management program to control bugs and/or disease.
6. Use mulches such as bark compost to help planting beds retain moisture.
7. Consider water consumption when selecting plants. Some plants use more water than others. Consult a good gardening book or your local nursery to determine which low water using plants are correct for your area.
8. Plant placement is important. Remember, right plant, right place! Shade loving plants don't do well if placed in the sun and will require excessive watering to survive. Place plants with similar water needs in common areas so all can benefit from the same application of water.

http://www.doh.wa.gov/ehp/dw/

DOH PUB. # 331-120-7 Washington State Department of Health

3. Turn off your sprinkler system at the first sign of saturation or runoff to allow the water to soak in. Water again in an hour or two if needed.

4. Make sure the controller of your automated sprinkler system is properly set to achieve minimum watering levels.

Landscaping

1. Consider alternate landscaping practices. Reduce turf area or use groundcovers and/or mulches instead of turf. Generally, groundcovers use less water than turf areas.
2. Use low water using turf varieties. Consult your county extension office or local nursery to identify low water using turf varieties for your area.
3. Aerate to reduce thatch (dead grass) buildup in turf areas in spring or fall. Thatch restricts penetration of water, air and nutrients. Aeration will also increase water penetration in compacted soils.
4. Consider using organic fertilizer. Consult a nursery or landscape professional for a well balanced fertilizer program.
5. Spot spray weeds as needed and consider an integrated pest management program to control bugs and/or disease.
6. Use mulches such as bark compost to help planting beds retain moisture.
7. Consider water consumption when selecting plants. Some plants use more water than others. Consult a good gardening book or your local nursery to determine which low water using plants are correct for your area.
8. Plant placement is important. Remember, right plant, right place! Shade loving plants don't do well if placed in the sun and will require excessive watering to survive. Place plants with similar water needs in common areas so all can benefit from the same application of water.

http://www.doh.wa.gov/ehp/dw/

DOH PUB. # 331-120-7 Washington State Department of Health

Salmon Recovery

Guideline 8

Did you know: The water people use indoors and outdoors to drink, cook, clean, wash and landscape with is the same water salmon need in rivers and streams to survive. Now that 16 salmon stocks have been listed under the Endangered Species Act (ESA) as threatened or endangered, the need to conserve water is greater than ever.

Chinook

Pink

Steelhead

Coho

What is ESA? The Endangered Species Act is a federal law passed in 1973 that makes it illegal for anyone to possess, harm or kill a protected species. It applies not only to federal and state agencies, but also to individual persons.

How can water conservation help save fish? The more water people use or waste, the less there is for fish in rivers and streams. Conserving water will help increase the instream flow of water in rivers and streams, especially during the dry summer months and other low flow periods. Increasing the instream flow helps fish swim up and downstream, improves spawning habitat, and protects other wildlife and our future water resources.

Salmon Recovery

Guideline 8

Did you know: The water people use indoors and outdoors to drink, cook, clean, wash and landscape with is the same water salmon need in rivers and streams to survive. Now that 16 salmon stocks have been listed under the Endangered Species Act (ESA) as threatened or endangered, the need to conserve water is greater than ever.

Chinook

Pink

Steelhead

Coho

What is ESA? The Endangered Species Act is a federal law passed in 1973 that makes it illegal for anyone to possess, harm or kill a protected species. It applies not only to federal and state agencies, but also to individual persons.

How can water conservation help save fish? The more water people use or waste, the less there is for fish in rivers and streams. Conserving water will help increase the instream flow of water in rivers and streams, especially during the dry summer months and other low flow periods. Increasing the instream flow helps fish swim up and downstream, improves spawning habitat, and protects other wildlife and our future water resources.

Salmon Recovery

Guideline 8

Did you know: The water people use indoors and outdoors to drink, cook, clean, wash and landscape with is the same water salmon need in rivers and streams to survive. Now that 16 salmon stocks have been listed under the Endangered Species Act (ESA) as threatened or endangered, the need to conserve water is greater than ever.

Chinook

Pink

Steelhead

Coho

What is ESA? The Endangered Species Act is a federal law passed in 1973 that makes it illegal for anyone to possess, harm or kill a protected species. It applies not only to federal and state agencies, but also to individual persons.

How can water conservation help save fish? The more water people use or waste, the less there is for fish in rivers and streams. Conserving water will help increase the instream flow of water in rivers and streams, especially during the dry summer months and other low flow periods. Increasing the instream flow helps fish swim up and downstream, improves spawning habitat, and protects other wildlife and our future water resources.

Remember, saving salmon safeguards public health and protects our environment too. We can save salmon while also maintaining a healthy economy. This means a brighter future for the people of Washington State. To learn more about salmon recovery, contact the Governors Salmon Recovery Office at:

P.O. Box 43113 • Olympia, WA 98504-3113
PHONE: (360) 902-2231 • FAX: (360) 902-2215
http://www.governor.wa.gov/gsro/

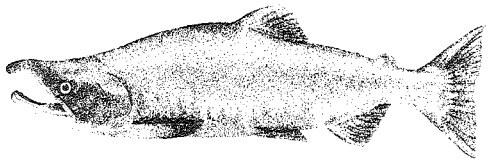

Sockeye

How can I help?

Understanding water conservation practices and applying water conservation techniques will help you save money and water. Proper application of fertilizers and pesticides, or the use of natural pest control measures, will also help keep water clean. Conserving water and minimizing the use of harmful chemicals will not only save salmon, but protects the environment for all of us. To learn more about how you can conserve water, contact the Washington State Department of Health or your local water utility for more information.

More Information

Washington State Department of Health
Office of Drinking Water
P.O. Box 47828 • Olympia, WA 98504-7828
(360) 236-3100 • 1-800-521-0323
http://www.doh.wa.gov/ehp/dw/

DOH PUB. # 331-120-8

Washington State Department of Health

Remember, saving salmon safeguards public health and protects our environment too. We can save salmon while also maintaining a healthy economy. This means a brighter future for the people of Washington State. To learn more about salmon recovery, contact the Governors Salmon Recovery Office at:

P.O. Box 43113 • Olympia, WA 98504-3113
PHONE: (360) 902-2231 • FAX: (360) 902-2215
http://www.governor.wa.gov/gsro/

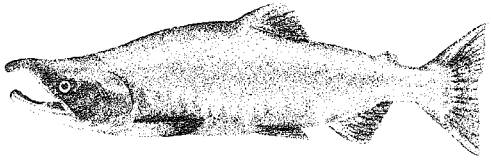

Sockeye

How can I help?

Understanding water conservation practices and applying water conservation techniques will help you save money and water. Proper application of fertilizers and pesticides, or the use of natural pest control measures, will also help keep water clean. Conserving water and minimizing the use of harmful chemicals will not only save salmon, but protects the environment for all of us. To learn more about how you can conserve water, contact the Washington State Department of Health or your local water utility for more information.

More Information

Washington State Department of Health
Office of Drinking Water
P.O. Box 47828 • Olympia, WA 98504-7828
(360) 236-3100 • 1-800-521-0323
http://www.doh.wa.gov/ehp/dw/

DOH PUB. # 331-120-8

Washington State Department of Health

Remember, saving salmon safeguards public health and protects our environment too. We can save salmon while also maintaining a healthy economy. This means a brighter future for the people of Washington State. To learn more about salmon recovery, contact the Governors Salmon Recovery Office at:

P.O. Box 43113 • Olympia, WA 98504-3113
PHONE: (360) 902-2231 • FAX: (360) 902-2215
http://www.governor.wa.gov/gsro/

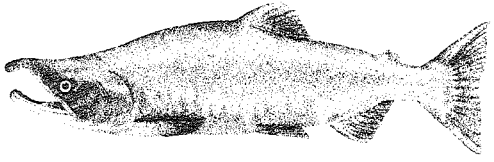

Sockeye

How can I help?

Understanding water conservation practices and applying water conservation techniques will help you save money and water. Proper application of fertilizers and pesticides, or the use of natural pest control measures, will also help keep water clean. Conserving water and minimizing the use of harmful chemicals will not only save salmon, but protects the environment for all of us. To learn more about how you can conserve water, contact the Washington State Department of Health or your local water utility for more information.

More Information

Washington State Department of Health
Office of Drinking Water
P.O. Box 47828 • Olympia, WA 98504-7828
(360) 236-3100 • 1-800-521-0323
http://www.doh.wa.gov/ehp/dw/

DOH PUB. # 331-120-8

Washington State Department of Health

Appendix K

Susceptibility Assessment Survey Forms

RECEIVED
JUL 25 1994
MASON CO. DCD

RECEIVED
JUN 17 1994
Department of Health
Division of Drinking Water

Ground Water Contamination Susceptibility Assessment Survey Form

Version 2.1

IMPORTANT! Please complete one form for each ground water source (well, wellfield, spring) used in your water system. Photocopy as necessary.

PART I: System Information

Well owner/manager : Mason County DCD

Water system name : HARTSTENE POINTE

County: MASON

Water system number: 315690 Source number: 501

Well depth: 170 (ft.) (*From WFI form*)

Source name: Well #1

WA well identification tag number: ___ ___ ___-___ ___ ___

X well not tagged

Number of connections: 321 Population served: 860

Township: 21 N Range: 01 W

Section: 19 1/4 1/4 Section: SW/SW

Latitude/longitude (if available): ____/____

How was lat./long. determined?

____ global positioning device ____ survey ____ topographic map
____other: ____

* Please refer to Assistance Packet for details and explanations of all questions in Parts II through V.

PART II: Well Construction and Source Information

1) Date well originally constructed: ___ / ___ /___ month/day/year

last reconstruction: ____ / ____ /____ month/day/year

X information unavailable

2) Well driller: N/A

___ well driller unknown

3) Type of well:

___ Drilled: ___ rotary ___ bored ___ cable (percussion) ___ Dug

___ Other: ___ spring(s) ___ lateral collector (Ranney)

___ driven ___ jetted ___ other: _____

Additional comments: _____

4) Well report available? ___ YES (attach copy to form) ___ NO

If no well log is available, please attach any other records documenting well construction; e.g. boring logs, "as built" sheets, engineering reports, well reconstruction logs.

5) Average pumping rate: 75 (gallons/min)

Source of information: pump curves and metering

If not documented, how was pumping rate determined? Have documentation from pump supplier.

___ Pumping rate unknown

6) Is this source treated? Not yet but will be soon

If so, what type of treatment:

___ disinfection ___ filtration ___ carbon filter ___ air stripper ___ other

Purpose of treatment (describe materials to be removed or controlled by treatment): Iron & Manganese Removal

7) If source is chlorinated, is a chlorine residual maintained: YES NO

Residual level: 0.3 *(At the point closest to the source.)*

PART III: Hydrogeologic Information

1) Depth to top of open interval: [check one]

___ < 20 ft ___ 20-50 ft ___ 50-100 ft ___ 100-200 ft ___ >200 ft

___ information unavailable ('< ' *means less than;* '> ' *means greater than*)

2) Depth to ground water (static water level):

___ < 20 ft ___ 20-50 ft ___ 50-100 ft ✓ > 100 ft

___ flowing well/spring (artesian)

How was water level determined?

___well log ✓ other: Measured with well sounder

___ depth to ground water unknown

3) If source is a flowing well or spring, what is the confining pressure:

_____ psi (pounds per square inch)
or
_____ feet above wellhead

4) If source is a flowing well or spring, is there a surface impoundment, reservoir, or catchment associated with this source: YES / NO

5) Wellhead elevation (height above mean sea level): 120 (ft)

How was elevation determined? ✓ topographic map ___ Drilling/Well Log ___ altimeter

___ other: _____

___ information unavailable

6) Confining layers: (This can be completed only for those sources with a drilling log, well log or geologic report describing subsurface conditions. Please refer to assistance package for example.)

Personal experience and well logs from nearby wells indicate Existence of confining layer.

___ evidence of a confining layer in well log

___ no evidence of a confining layer in well log

If there is evidence of a confining layer, is the depth to ground water more than 20 feet above the top of the open interval? ___ YES ___ NO

✓ information unavailable

7) Sanitary setback:

___ < 100 ft* X 100–120 ft ___ 120–200 ft ___ > 200 ft

* if less than 100 ft describe the site conditions:

8) Wellhead construction:

__ wellhead enclosed in a wellhouse

X controlled access (describe): Entire development is fenced and full time security officers patrol area on a regular basis

___ other uses for wellhouse (describe): Treatment Plant + Controls

__ no wellhead control

9) Surface seal:

___ 18 ft

___ < 18 ft (no Department of Ecology approval) ('<' *means less than*)

___ < 18 ft (Approved by Ecology, include documentation) ('<' *means less than*)

___ > 18 ft ('>' *means greater than*)

___ depth of seal unknown

___ no surface seal

10) Annual rainfall (inches per year):

___ < 10 in/yr ___ 10–25 in/yr X > 25 in/yr

PART IV: Mapping Your Ground Water Resource

1) Annual volume of water pumped: 2,000,000 (gallons)

How was this determined? Well is used as auxillary to meet peak demand periods

X meter

X estimated: ___ pumping rate (_____)

___ pump capacity (_____)

____ other: _____

2) "Calculated Fixed Radius" estimate of ground water movement:
(see Instruction Packet)

6 month ground water travel time : 220 (ft)

1 year ground water travel time : 310 (ft)

5 year ground water travel time: 700 (ft)

10 year ground water travel time: 980 (ft)

Information available on length of screened/open interval?

__ YES X NO

Length of screened/open interval: _____(ft)

3) Is there a river, lake, pond, stream, or other obvious surface water body within the 6 month time of travel boundary? YES / NO (mark and identify on map).

4) Is there a stormwater and/or wastewater facility, treatment lagoon, or holding pond located within the 6 month time of travel boundary? YES / NO (mark and identify on map).

Comments: _____

PART V: Assessment of Water Quality

1) Regional sources of risk to ground water:

Please indicate if any of the following are present within a circular area around your water source having a radius up to and including the five year ground water travel time:

	6 month	1 year	5 year	unknown
likely pesticide application	____	____	____	____
stormwater injection wells	____	____	____	____
other injection wells	____	____	____	____
abandoned ground water well	____	____	____	____
landfills, dumps, disposal areas	____	____	____	____
known hazardous materials clean-up site	____	____	____	____
water system(s) with known quality problems	____	____	____	____
population density > 1 house/acre	X	____	____	____
residences commonly have septic tanks	____	____	____	____
Wastewater treatment lagoons	____	____	____	____
sites used for land application of waste	____	____	____	____

Mark and identify on map any of the risks listed above which are located within the 6 month time of travel boundary? *(Please include a map of the wellhead and time of travel areas with this form. Please locate and mark any of the following.)*

If other recorded or potential sources of ground water contamination exist within the ten year time of travel circular zone around your water supply, please describe:

_____

_____

_____

_____

_____

_____

2) Source specific water quality records:

Please indicate the occurrence of any test results since 1986 that meet the following conditions: (Unless listed on assessment, MCLs are listed in assistance package.)

	YES	NO
A. Nitrate: (Nitrate MCL = 10 mg/l)		
Results greater than MCL	___	X
	YES	NO
< 2 mg/liter nitrate	___	X
2–5 mg/liter nitrate	___	___
> 5 mg/liter nitrate	___	___
___ Nitrate sampling records unavailable		
	YES	NO
B. VOCs: (VOC detection level 0.5 ug/l or 0.0005 mg/l.)		
Results greater than MCL or SAL	___	___
VOCs detected at least once	___	___
VOCs never detected	___	X
___ VOC sampling records unavailable		
	YES	NO
C. EDB/DBCP:(EDB MCL = 0.05 ug/l or 0.00005 mg/l. DBCP MCL = 0.2 ug/l or 0.0002 mg/l.)		
EDB/DBCP detected below MCL at least once	___	___
EDB/DBCP detected above MCL at least once	___	___
EDB/DBCP never detected	___	___
___ EDB/DBCP tests required but not yet completed		
X EDB/DBCP tests not required		
	YES	NO
D. Other SOCs (Pesticides):		
Other SOCs detected (pesticides and other synthetic organic chemicals).	___	___
___ Other SOC tests performed but none detected (list test methods in comments		
X Other SOC tests not performed		

If any SOCs in addition to EDB/DBCP were detected, please identify and date. If other SOC tests were performed, but no SOCs detected, list test methods here: _____

_____

_____

_____

	YES	NO
E. Bacterial contamination:		
Any bacterial detection(s) in the past 3 years in samples taken from the source (not distribution sampling records).	___	X
Has source (in past 3 years) had a bacteriological contamination problem found in distribution samples that was attributed to the source.	___	X

___ Source sampling records for bacteria unavailable

Part VI: Geographic or Hydrologic Factors Contributing to a Non-Circular Zone of Contribution

The following questions will help identify those ground water systems which may not be accurately represented by the calculated fixed radius (CFR) method described in Part IV. For these sources, the CFR areas should be used as a preliminary delineation of the critical time of travel zones for that source. As a system develops its Wellhead Protection Plan for theses sources, a more detailed delineation method should be considered.

1) Is there evidence of obvious hydrologic boundaries within the 10 year time of travel zone of the CFR? (Does the largest circle extend over a stream, river, lake, up a steep hillside, and/or over a mountain or ridge?)

_____ YES ___X___ NO

Describe with references to map produced in Part IV:

_____

_____

2) Aquifer Material:

A) Does the drilling log, well log or other geologic/engineering reports identify that the well is located in an area where the underground conditions are identified as fractured rock and/or basalt terrain?

_____ YES ___X___ NO

B) Does the drilling log, well log or other geologic/engineering reports indicate that the well is located in an area where the underground conditions are primarily identified as coarse sand and gravel?

_____ YES ___X___ NO

3) Is the source located in an aquifer with a high horizontal flow rate? (These can include sources located on flood plains of large rivers, artesian wells with high water pressure, and/or shallow flowing wells and springs.)

_____ YES X NO

4) Are there other high capacity wells (agricultural, municipal and/or industrial) located within the CFRs?

a) Presence of ground water extraction wells removing more than approximately 500 gal/min within...

	YES	NO	unknown
< 6 month travel time		X	
6 month–1 year travel time		X	
1–5 year travel time		X	
5–10 year travel time		X	

b) Presence of ground water recharge wells (dry wells) or heavy irrigation within...

	YES	NO	unknown
< 1 year travel time		X	
1–5 year travel time		X	
5–10 year travel time		X	

Please identify or describe additional hydrologic or geographic conditions that you believe may affect the shape of the zone of contribution for this source. Where possible, reference them to locations on the map produced in Part IV.

_____

_____

_____

_____

_____

_____

_____

_____

Suggestions and Comments

Did you attend one of the susceptibility workshops? YES / NO

Did you find it useful? YES / NO

Did you seek outside asistance to complete the assessment? YES / NO

This form and instruction packet are still in the process of development. Your comments, suggestions and questions will help us upgrade and improve this assessment form. If you found particular sections confusing or problematic please let us know. How could this susceptibility assessment be improved or made clearer? Did the instruction package help you find the information needed to complete the assessment? How much time did it take you to complete the form? Were you able to complete the assessment without additional/outside expertise? Do you feel the assessment was valuable as a learning experience? Any other comments or constructive criticisms you have would be appreciated.

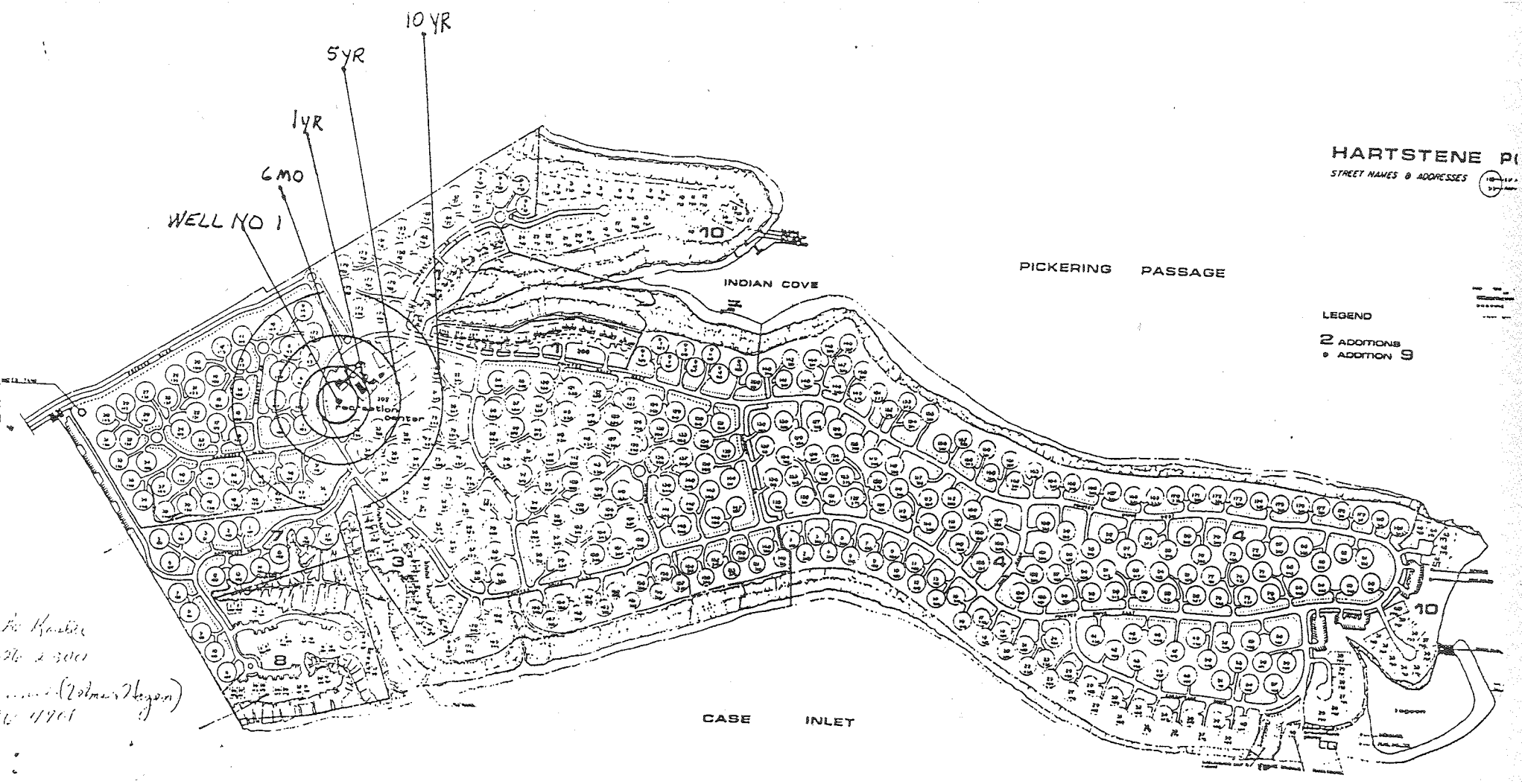
10 YR
5 YR
1 YR
6 MO
WELL NO 1
HARTSTENE P
STREET NAMES & ADDRESSES
PICKERING PASSAGE
INDIAN COVE
LEGEND
2 ADDITIONS
ADDITION 9
CASE INLET
10
4
3
8

Ground Water Contamination
Susceptibility Assessment Survey Form
Version 2.1

IMPORTANT! Please complete one form for each ground water source (well, wellfield, spring) used in your water system. Photocopy as necessary.

PART I: System Information

Well owner/manager : Mason County DCD / Tom Moore

Water system name : Hartstene Pointe

County: Mason

Water system number: 315690 Source number: 80-2

Well depth: 166 (ft.) (*From WFI form*)

Source name: Well #2

WA well identification tag number: ___ ___ ___-___ ___ ___

X well not tagged

Number of connections: 321 Population served: 860

Township: 21 N Range: 01 W

Section: 19 1/4 1/4 Section: SW/SW

Latitude/longitude (if available): _____/_____

How was lat./long. determined?

_____ global positioning device _____ survey _____ topographic map
____other: _____

* Please refer to Assistance Packet for details and explanations of all questions in Parts II through V.

PART II: Well Construction and Source Information

1) Date well originally constructed: 6 / 23 / 76 month/day/year

last reconstruction: ____ / ____ / ____ month/day/year

_____ information unavailable

2) Well driller: Richardson Well Drilling Co.
P.O. Box 44408
Tacoma, WA 98444

___ well driller unknown

3) Type of well:

___ Drilled: X rotary ___ bored ___ cable (percussion) ___ Dug

___ Other: ___ spring(s) ___ lateral collector (Ranney)

___ driven ___ jetted ___ other: _____

Additional comments: _____

4) Well report available? X YES (attach copy to form) ___ NO

If no well log is available, please attach any other records documenting well construction; e.g. boring logs, "as built" sheets, engineering reports, well reconstruction logs.

5) Average pumping rate: 90 (gallons/min)

Source of information: — operational records —

If not documented, how was pumping rate determined? _____

___ Pumping rate unknown

6) Is this source treated?

If so, what type of treatment:

___ disinfection X filtration ___ carbon filter ___ air stripper ___ other

Purpose of treatment (describe materials to be removed or controlled by treatment):
Iron + Manganese Removal

7) If source is chlorinated, is a chlorine residual maintained: (YES) / NO

Residual level: 0.2 (*At the point closest to the source.*)

PART III: Hydrogeologic Information

1) Depth to top of open interval: [check one]

___ < 20 ft ___ 20-50 ft ___ 50-100 ft X 100-200 ft ___ >200 ft

___ information unavailable ('< ' *means less than;* '> ' *means greater than*)

2) Depth to ground water (static water level):

___ < 20 ft ___ 20-50 ft ___ 50-100 ft X > 100 ft

___ flowing well/spring (artesian)

How was water level determined?

X well log ___ other: Measured

___ depth to ground water unknown

3) If source is a flowing well or spring, what is the confining pressure:

_____ psi (pounds per square inch)
or
_____ feet above wellhead

4) If source is a flowing well or spring, is there a surface impoundment, reservoir, or catchment associated with this source: YES / NO

5) Wellhead elevation (height above mean sea level): 120 (ft)

How was elevation determined? X topographic map ___ Drilling/Well Log ___ altimeter

___ other: _____

___ information unavailable

6) Confining layers: (This can be completed only for those sources with a drilling log, well log or geologic report describing subsurface conditions. Please refer to assistance package for example.)

X evidence of a confining layer in well log

___ no evidence of a confining layer in well log

If there is evidence of a confining layer, is the depth to ground water more than 20 feet above the top of the open interval? X YES ___ NO

___ information unavailable

7) Sanitary setback:

___ < 100 ft* ___ 100–120 ft ___ 120–200 ft X > 200 ft

* if less than 100 ft describe the site conditions:

8) Wellhead construction:

X wellhead enclosed in a wellhouse

X controlled access (describe): Entire Community Fenced and patroled by full time Security

___ other uses for wellhouse (describe): ___

___ no wellhead control

9) Surface seal:

___ 18 ft

___ < 18 ft (no Department of Ecology approval) ('<' *means less than*)

___ < 18 ft (Approved by Ecology, include documentation) ('<' *means less than*)

X > 18 ft ('>' *means greater than*)

___ depth of seal unknown

___ no surface seal

10) Annual rainfall (inches per year):

___ < 10 in/yr ___ 10–25 in/yr X > 25 in/yr

PART IV: Mapping Your Ground Water Resource

1) Annual volume of water pumped: 12,000,000 (gallons)

How was this determined?

X meter

X estimated: ___ pumping rate (90 gpm at 6 hrs/day)

___ pump capacity ( )

___ other: _____

2) "Calculated Fixed Radius" estimate of ground water movement:
(see Instruction Packet)

6 month ground water travel time : 310 (ft)

1 year ground water travel time : 440 (ft)

5 year ground water travel time: 980 (ft)

10 year ground water travel time: 1390 (ft)

Information available on length of screened/open interval?

X YES ___ NO

Length of screened/open interval: 14 (ft)

3) Is there a river, lake, pond, stream, or other obvious surface water body within the 6 month time of travel boundary? YES / NO (mark and identify on map).

4) Is there a stormwater and/or wastewater facility, treatment lagoon, or holding pond located within the 6 month time of travel boundary? YES / NO (mark and identify on map).

Comments: _____

PART V: Assessment of Water Quality

1) Regional sources of risk to ground water:

Please indicate if any of the following are present within a circular area around your water source having a radius up to and including the five year ground water travel time:

	6 month	1 year	5 year	unknown
likely pesticide application	____	____	____	____
stormwater injection wells	____	____	____	____
other injection wells	____	____	____	____
abandoned ground water well	____	____	____	____
landfills, dumps, disposal areas	____	____	____	____
known hazardous materials clean-up site	____	____	____	____
water system(s) with known quality problems	____	____	____	____
population density > 1 house/acre	X	____	____	____
residences commonly have septic tanks	____	____	____	____
Wastewater treatment lagoons	____	____	____	____
sites used for land application of waste	____	____	____	____

Mark and identify on map any of the risks listed above which are located within the 6 month time of travel boundary? (*Please include a map of the wellhead and time of travel areas with this form. Please locate and mark any of the following.*)

If other recorded or potential sources of ground water contamination exist within the ten year time of travel circular zone around your water supply, please describe:

_____

_____

_____

_____

_____

_____

2) Source specific water quality records:

Please indicate the occurrence of any test results since 1986 that meet the following conditions: (Unless listed on assessment, MCLs are listed in assistance package.)

	YES	NO
A. Nitrate: (Nitrate MCL = 10 mg/l)		
Results greater than MCL	___	X
	YES	NO
< 2 mg/liter nitrate	X	___
2-5 mg/liter nitrate	___	X
> 5 mg/liter nitrate	___	X
___ Nitrate sampling records unavailable		
	YES	NO
B. VOCs: (VOC detection level 0.5 ug/l or 0.0005 mg/l.)		
Results greater than MCL or SAL	___	X
VOCs detected at least once	___	X
VOCs never detected	X	___
___ VOC sampling records unavailable		
	YES	NO
C. EDB/DBCP:(EDB MCL = 0.05 ug/l or 0.00005 mg/l. DBCP MCL = 0.2 ug/l or 0.0002 mg/l.)		
EDB/DBCP detected below MCL at least once	___	___
EDB/DBCP detected above MCL at least once	___	___
EDB/DBCP never detected	___	___
___ EDB/DBCP tests required but not yet completed		
X EDB/DBCP tests not required		
	YES	NO
D. Other SOCs (Pesticides):		
Other SOCs detected (pesticides and other synthetic organic chemicals).	___	___
___ Other SOC tests performed but none detected (list test methods in comments		
X Other SOC tests not performed		

If any SOCs in addition to EDB/DBCP were detected, please identify and date. If other SOC tests were performed, but no SOCs detected, list test methods here: _____

_____

_____

_____

	YES	NO
E. Bacterial contamination:		
Any bacterial detection(s) in the past 3 years in samples taken from the source (not distribution sampling records).	___	X
Has source (in past 3 years) had a bacteriological contamination problem found in distribution samples that was attributed to the source.	___	X

___ Source sampling records for bacteria unavailable

Part VI: Geographic or Hydrologic Factors Contributing to a Non-Circular Zone of Contribution

The following questions will help identify those ground water systems which may not be accurately represented by the calculated fixed radius (CFR) method described in Part IV. For these sources, the CFR areas should be used as a preliminary delineation of the critical time of travel zones for that source. As a system develops its Wellhead Protection Plan for theses sources, a more detailed delineation method should be considered.

1) Is there evidence of obvious hydrologic boundaries within the 10 year time of travel zone of the CFR? (Does the largest circle extend over a stream, river, lake, up a steep hillside, and/or over a mountain or ridge?)

_____ YES _____X_____ NO

Describe with references to map produced in Part IV:

_____

_____

2) Aquifer Material:

A) Does the drilling log, well log or other geologic/engineering reports identify that the well is located in an area where the underground conditions are identified as fractured rock and/or basalt terrain?

_____ YES _____X_____ NO

B) Does the drilling log, well log or other geologic/engineering reports indicate that the well is located in an area where the underground conditions are primarily identified as coarse sand and gravel?

_____ YES _____X_____ NO

3) Is the source located in an aquifer with a high horizontal flow rate? (These can include sources located on flood plains of large rivers, artesian wells with high water pressure, and/or shallow flowing wells and springs.)

_____ YES X NO

4) Are there other high capacity wells (agricultural, municipal and/or industrial) located within the CFRs?

a) Presence of ground water extraction wells removing more than approximately 500 gal/min within...

	YES	NO	unknown
< 6 month travel time		X	
6 month–1 year travel time		X	
1–5 year travel time		X	
5–10 year travel time		X	

b) Presence of ground water recharge wells (dry wells) or heavy irrigation within...

	YES	NO	unknown
< 1 year travel time		X	
1–5 year travel time		X	
5–10 year travel time		X	

Please identify or describe additional hydrologic or geographic conditions that you believe may affect the shape of the zone of contribution for this source. Where possible, reference them to locations on the map produced in Part IV.

_____

_____

_____

_____

_____

_____

_____

_____

Suggestions and Comments

Did you attend one of the susceptibility workshops? YES / NO

Did you find it useful? YES / NO

Did you seek outside asistance to complete the assessment? YES / NO

This form and instruction packet are still in the process of development. Your comments, suggestions and questions will help us upgrade and improve this assessment form. If you found particular sections confusing or problematic please let us know. How could this susceptibility assessment be improved or made clearer? Did the instruction package help you find the information needed to complete the assessment? How much time did it take you to complete the form? Were you able to complete the assessment without additional/outside expertise? Do you feel the assessment was valuable as a learning experience? Any other comments or constructive criticisms you have would be appreciated.

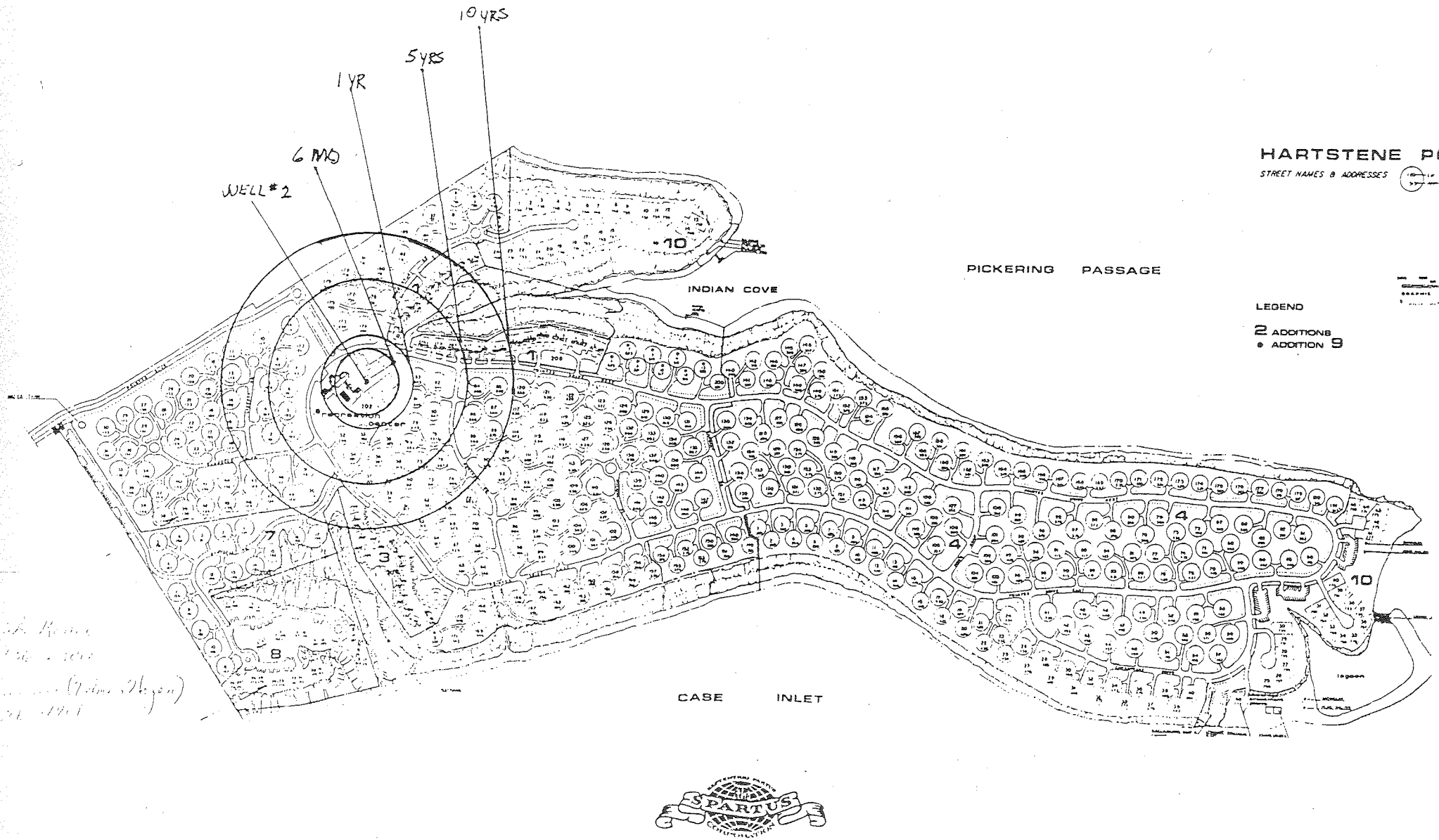
10 YRS
5 YRS
1 YR
6 MO
WELL #2
HARTSTENE P
STREET NAMES & ADDRESSES
PICKERING PASSAGE
INDIAN COVE
LEGEND
2 ADDITIONS
ADDITION 9
10
7
3
8
4
4
10
CASE INLET
SPARTUS

File Original and First Copy with Department of Ecology
Second Copy — Owner's Copy
Third Copy — Driller's Copy

WATER WELL REPORT

STATE OF WASHINGTON

Application No. .....

Permit No. .....

(1) OWNER: Name [illegible] Address P.O. Box 130 Bellevue, Wa. 98009

(2) LOCATION OF WELL: County Yakon Horseshoe Point — SE ¼ SE ¼ Sec. 19 T. 21 N., R. 1 W.M.

Bearing and distance from section or subdivision corner

(3) PROPOSED USE: Domestic ☐ Industrial ☐ Municipal ☐ Irrigation ☐ Test Well ☒ Other ☐

(4) TYPE OF WORK: Owner's number of well (if more than one) 2

New well ☒ Method: Dug ☐ Bored ☐
Deepened ☐ Cable ☐ Driven ☐
Reconditioned ☐ Rotary ☒ Jetted ☐

(5) DIMENSIONS: Diameter of well 6 inches.
Drilled 180 ft. Depth of completed well 180 ft.

(6) CONSTRUCTION DETAILS:

Casing installed: 6 " Diam. from 0 ft. to 170 ft.
Threaded ☐ " Diam. from ft. to ft.
Welded ☒ " Diam. from ft. to ft.

Perforations: Yes ☐ No ☒
Type of perforator used
SIZE of perforations in. by in.
perforations from ft. to ft.
perforations from ft. to ft.
perforations from ft. to ft.

Screens: Yes ☒ No ☐
Manufacturer's Name Johnson Well Screen
Type stainless steel Model No.
Diam. 6 Slot size 50 from 170 ft. to 180 ft.
Diam. Slot size from ft. to ft.

Gravel packed: Yes ☐ No ☒ Size of gravel:
Gravel placed from ft. to ft.

Surface seal: Yes ☒ No ☐ To what depth? 20 ft.
Material used in seal Bentonite
Did any strata contain unusable water? Yes ☐ No ☒
Type of water? Depth of strata
Method of sealing strata off

(7) PUMP: Manufacturer's Name
Type: H.P.

(8) WATER LEVELS: Land-surface elevation above mean sea level .... ft.
Static level [illegible] ft. below top of well Date 10-16-75
Artesian pressure lbs. per square inch Date
Artesian water is controlled by (Cap, valve, etc.)

(9) WELL TESTS: Drawdown is amount water level is lowered below static level
Was a pump test made? Yes ☐ No ☐ If yes, by whom? Driller
Yield: [illegible] gal./min. with [illegible] ft. drawdown after 4 hrs.
" " " "
" " " "

Recovery data (time taken as zero when pump turned off) (water level measured from well top to water level)

Time	Water Level	Time	Water Level	Time	Water Level

Date of test
Bailer test gal./min. with ft. drawdown after hrs.
Artesian flow g.p.m. Date
Temperature of water Was a chemical analysis made? Yes ☐ No ☐

(10) WELL LOG:

Formation: *Describe by color, character, size of material and structure, and show thickness of aquifers and the kind and nature of the material in each stratum penetrated, with at least one entry for each change of formation.*

MATERIAL	FROM	TO
Seal hard pan	0	20
Hard pan	20	40
Sand & gravel	40	90
Clay & gravel	90	145
Sand & gravel water bearing	145	180
Fine sand	180	220

Work started ....., 19..... Completed ....., 19.....

WELL DRILLER'S STATEMENT:

This well was drilled under my jurisdiction and this report is true to the best of my knowledge and belief.

NAME Richardson Well Drilling Co.
(Person, firm, or corporation) (Type or print)

Address [illegible] P.O. Box, Tacoma, Wa. [illegible]

[Signed] .....
(Well Driller)

License No. [illegible] Date 6-23, 19 76

(USE ADDITIONAL SHEETS IF NECESSARY)

ECY 050-1-20

3

File Original and First Copy with Department of Ecology
Second Copy — Owner's Copy
Third Copy — Driller's Copy

WATER WELL REPORT

STATE OF WASHINGTON

Application No. .....

Permit No. .....

(1) OWNER: Name [illegible] Address [illegible] Bellevue, Wa. [illegible]

(2) LOCATION OF WELL: County [illegible] — [illegible] ¼ [illegible] ¼ Sec. 19 T. 21 N., R. 1 W.M.

Bearing and distance from section or subdivision corner [illegible]

(3) PROPOSED USE: Domestic ☒ Industrial ☐ Municipal ☐ Irrigation ☐ Test Well ☐ Other ☐

(4) TYPE OF WORK: Owner's number of well (if more than one) 2

New well ☒ Method: Dug ☐ Bored ☐
Deepened ☐ Cable ☐ Driven ☐
Reconditioned ☐ Rotary ☒ Jetted ☐

(5) DIMENSIONS: Diameter of well 8 inches.

Drilled 162 ft. Depth of completed well 162 ft.

(6) CONSTRUCTION DETAILS:

Casing installed: 8 " Diam. from 0 ft. to 162 ft.

Threaded ☐ " Diam. from ft. to ft.

Welded ☒ " Diam. from ft. to ft.

Perforations: Yes ☐ No ☒

Type of perforator used

SIZE of perforations in. by in.

perforations from ft. to ft.

perforations from ft. to ft.

perforations from ft. to ft.

Screens: Yes ☐ No ☐

Manufacturer's Name [illegible]

Type [illegible] Model No.

Diam. [illegible] Slot size [illegible] from [illegible] ft. to 152 ft.

Diam. 8 Slot size 80 from 152 ft. to 162 ft.

Gravel packed: Yes ☐ No ☒ Size of gravel:

Gravel placed from ft. to ft.

Surface seal: Yes ☒ No ☐ To what depth? 20 ft.

Material used in seal [illegible]

Did any strata contain unusable water? Yes ☐ No ☒

Type of water? Depth of strata

Method of sealing strata off

(7) PUMP: Manufacturer's Name [illegible]

Type: [illegible] H.P. 10

(8) WATER LEVELS: Land-surface elevation above mean sea level .... ft.

Static level [illegible] ft. below top of well Date 4-11-[illegible]

Artesian pressure lbs. per square inch Date

Artesian water is controlled by (Cap, valve, etc.)

(9) WELL TESTS: Drawdown is amount water level is lowered below static level

Was a pump test made? Yes ☒ No ☐ If yes, by whom? [illegible]

Yield: [illegible] gal./min. with [illegible] ft. drawdown after 5 1/2 hrs.

" " " "

" " " "

Recovery data (time taken as zero when pump turned off) (water level measured from well top to water level)

Time	Water Level	Time	Water Level	Time	Water Level

Date of test [illegible]

Bailer test gal./min. with ft. drawdown after hrs.

Artesian flow g.p.m. Date

Temperature of water Was a chemical analysis made? Yes ☐ No ☒

(10) WELL LOG:

Formation: *Describe by color, character, size of material and structure, and show thickness of aquifers and the kind and nature of the material in each stratum penetrated, with at least one entry for each change of formation.*

MATERIAL	FROM	TO
Gravel & sand fill	0	3
Top soil	3	5
Clay & gravel	5	18
Gravel	18	23
Blue clay	23	43
Brownish clay	43	55
Yellow clay & gravel	55	68
Gravel	68	73
Hard pan	73	89
Hard packed sand	89	95
Hard packed sand & gravel	95	113
Gravel & clay	113	138
Rock-pea, sand & water	138	140
Rock, sand, pea gravel	140	154
Pea gravel & rock	154	155
Clay, gravel & rock cemented	155	156
Pea gravel, sand-rock	156	162
Sand & clay	162	162

Work started 3-28, 19 75 Completed [illegible], 19 [illegible]

WELL DRILLER'S STATEMENT:

This well was drilled under my jurisdiction and this report is true to the best of my knowledge and belief.

NAME Richardson Well Drilling Co.
(Person, firm, or corporation) (Type or print)

Address P.O. Box 444 - Renton, Wa. [illegible]

[Signed] (Well Driller)

License No. [illegible] Date [illegible], 19 [illegible]

(USE ADDITIONAL SHEETS IF NECESSARY)

Appendix L

Sample Spill Response Notification Letter

Appendix B-3
Sample Notification Letters

Example Letter 1 **To local jurisdictions / agencies**

Dear (Agency/Local Government):

As part of the wellhead protection program for the Taylor Gulch Water Company, we are hereby informing you of the findings of our wellhead protection area delineation. This is in accordance with State regulations (WAC 246-290-135).

Our company has 450 service connections, and serves a population of approximately 1,071 people. The State Department of Health has given our system a rating of "highly susceptible". This means that our drinking water supply is very vulnerable to contamination.

The enclosed map shows the 1, 5, and 10-year time of travel boundaries for our wellhead protection area. Any ground water contamination that occurs within this wellhead protection area has a high potential to reach our well. It is therefore of utmost importance to us that all reasonable steps be taken to ensure that land use activities within this area do not contaminate our customers' drinking water supplies.

Thank you for your support in protecting our drinking water.

Sincerely,

Example Letter 2 **To Potential Source Owners/Operators**

Dear (Owner/Operator):

In order to protect the drinking water supply for the customers of Taylor's Gulch Water System, we are developing a wellhead protection program in accordance with State requirements. As part of our wellhead protection program, we mapped the area overlying the short-term recharge zone of our drinking water supply wells. This is called our wellhead protection area.

Following the mapping of the wellhead protection area, we conducted an inventory of **potential** sources of ground water contamination within the area. The nature of your business and its location within our wellhead protection area means that your activities have the potential to affect our customers' drinking water supply.

We have notified the regulatory agency(ies) that regulates your type of business/facility of your presence within our wellhead protection area. You should contact them to request technical assistance to help manage your business in a way that will best prevent ground water contamination. We realize you are already careful to protect the environment as you conduct your business. We hope that informing you of your location in our wellhead protection area will result in an increase in precautions to ensure that your activities will not impact our drinking water quality.

Sincerely,

Appendix M

Maintenance Records and Emergency Contact List

Appendix C
Contact Names, Addresses, and Phone Numbers

Washington State Department of Health Wellhead Protection Program contacts:

Headquarters
David Jennings
PO Box 47849
Olympia, WA 98504-7849
360-236-3149

Eastern Regional Office
Megan Harding
1500 West 4th Avenue, Suite 305
Spokane, WA 99204
509-456-2717

Deana Pavwoski
1500 West 4th Avenue, Suite 305
Spokane, WA 99204
509-456-5067

Northwest Regional Office
Richard Rodriguez
20435 72nd Avenue South, Suite 200
Kent, WA 98032
253-395-6771

Linda Scott
20435 72nd Avenue South, Suite 200
Kent, WA 98032
253-395-6770

Southwest Regional Office
Karen Klocke
PO Box 47823
Olympia, WA 98504-7823
360-664-2999

Washington State Department of Ecology contacts:

Hazardous Waste and Toxics Reduction Program
PO Box 47600
Olympia, WA 98504-7600
360-407-6700

Hazardous Waste Clean-up Sites
800-826-7716

Water Resources Program/Well Identification
Dick Szymarek
PO Box 47600
Olympia, WA 98504-7600
(360) 407-6648

Water Quality Program
PO Box 47600
Olympia, WA 98504-7600
(360) 407-6600

Central Regional Office
15 West Yakima Avenue, Suite 200
Yakima, WA 98902
(509) 575-2490

Eastern Regional Office
Mark Ader
4601 North Monroe
Spokane, WA 99205-1295
(509) 329-3400

Northwest Regional Office
Melissa Snoeberger
3190 160th Avenue SE
Bellevue, WA 98008-5452
(425) 649-7000

Southwest Regional Office
Igor Vern
300 Desmond Drive
Lacey, WA 98503
(360) 407-6300

Other State Agency contacts:

Municipal Research and Services Center
John Carpita
2601 4th Avenue, Suite 800
Seattle, WA 98121-1280
(206) 625-1300

Washington State Department of Agriculture
Pesticide Management Division
Ann Wick
PO Box 42589
Olympia, WA 98504-2589
(360) 902-2051

Washington State Department of Community Trade & Economic Development
Growth Management Division
Chris Parsons
PO Box 48300
Olympia, WA 98504-8300
(360) 725-3058

Washington State Department of Community Trade & Economic Development
Public Works Trust Fund
PO Box 48319
Olympia, WA 98504-8319
(360) 586-4120

Washington State University/Cooperative Extension contacts:

Water Quality Management Team
Robert Simmons
WSU Cooperative Extension
11840 Highway 101 N
Shelton, WA 98584-9709
(360) 427-9670 ext. 395

Western Washington Water Quality Coordinator
Pat Pearson
201 West Patison
Port Hadlock, WA 98339
(360) 379-5610

Agriculture & Natural Resource Program
Edward Adams
WSU Cooperative Extension
PO Box 1459
Spokane, WA 99210-1459
(509) 358-7960

Federal Agency contacts:

United States Department of Agriculture
Rural Development, Community Programs
Sandra Boughton
301 Yakima Street, Room 315
Wenatchee, WA 98801
(509) 664-0236

United States Department of Health & Human Services / Indian Health Service
Portland Area Office
(covers Oregon, Washington, and Idaho)
1220 SW Third Avenue, Room 476
Portland, OR 97204
(503) 326-2020

United States Department of Agriculture
Natural Resources Conservation Service
316 West Boone Avenue, Suite 450
Spokane, WA 99201-2348
(509) 323-2900

United States Environmental Protection Agency (EPA)
Office of Water
Jennifer Parker
1200 Sixth Street
Mail Stop: OW137
Seattle, WA 98101
(206) 553-1900

United States Geological Survey
Water Resources of Washington State
Water Science Center Office
1201 Pacific Avenue, Suite 600
Tacoma, WA 98402
(253) 428-3600

Emergency Contact List

Thomas Moore, Manager	360.427.9670 x 652
	360.490.0396
Mason County Utilities and Waste Management	360.427.9670 x 771
	360.490.2378
Mason County Fire Marshall	360.427.9670 x 273
WSDOH	360.664.2999
Ecology	360.407.6300
EPA	206.553.1900
Water Management Laboratories	253.531.3121
Washington State Public Health Laboratory	206.361.2896

MAIN REPAIR REPORT

Main #_____ Main Size _____ Section _____ _____/4 Map #_____

Node #_____ (Valve/Main #_____) to Node #_____ (Valve/Main #_____)

Date Installed _____/_____ Type _____ Manufacturer _____

Length of Main _____ ft. Number of Connections on Main _____

Valves to Isolate _____, _____, _____, _____, _____, _____,_____

Location:

_____ side of _____

From _____ St. to _____

Other Location Information:

_____

_____

Specific Location:

_____ ft. _____ of _____

_____ ft. _____ of _____

Site Map:

Last corrected _____/_____/_____ dBase enter _____/_____/_____ Map _____/_____/_____

Remarks on back of page _____ Yes _____ No

HYDRANTS MAINTENANCE / INSPECTION REPORT

Hydrant #_____, Valve Size _____, Section _____/_____/4, Map #_____

Location:
Principle St:_____ _____ ft. _____ of center line

Intersecting St:_____ _____ ft. _____ of center line

Specific Location: Checked OK _____ or measured as follows:

_____ ft. _____ of _____

_____ ft. _____ of _____

_____ ft. _____ of _____

Caps Missing: _____, Replaced: _____, Greased:_____

Chains Missing: _____, Replaced: _____, Freed: _____

Paint: OK _____, Repaint: _____

Oper. Nut: OK _____, Greased: _____ Replaced: _____

Nozzles: OK _____, Caulked: _____ Replaced: _____

Valve & Seat: OK _____, Replaced: _____

Packing: OK _____, Tightened: _____ Replaced:_____

Drainage: OK _____, Corrected: _____

Flushed: _____ Minutes _____ Nozzle Open

Pressure: Static: _____ Residual: _____ Flow _____ gpm

Branch Valve: Condition: _____

Other Problems / Work Needed: _____

_____

_____

Work / Repairs Completed:

_____ By: _____ Date ____/____/____

_____ By: _____ Date ____/____/____

_____ By: _____ Date ____/____/____

Inspection/Maintenance Completed by: _____ Date _____/_____/_____

Remarks on back of page _____ Yes _____ No

VALVE REPAIR REPORT

Valve #_____ Valve Size _____ Section _____ _____/4 Map #_____

Connecting Pipe #_____ to Pipe/Node #_____, Installed_____/_____

Type _____, Connecting ends _____ x _____, Make _____

Opens _____, # of turns _____, Depth to operate nut _____

Normally _____, Valve box cold-mixed? _____ needed? _____

General Location:

Principle St:_____ _____ ft. _____ of center line

Intersecting St:_____ _____ ft. _____ of center line

Specific Location:

_____ ft. _____ of _____

_____ ft. _____ of _____

_____ ft. _____ of _____

Valve/Site Map:

Last corrected ____/____/____ dBase enter ____/____/____ CAD Map ____/____/____

Remarks on back of page _____ Yes _____ No

VALVE MAINTENANCE / INSPECTION REPORT

Valve #_____, Valve Size _____, Section _____/_____/4, Map #_____

Location:
Principle St:_____ _____ ft. _____ of center line

Intersecting St:_____ _____ ft. _____ of center line

Specific Location: Checked OK _____ or measured as follows:

_____ ft. _____ of _____

_____ ft. _____ of _____

_____ ft. _____ of _____

Found: _____, # of turns: _____, Left: _____

Packing: OK _____, Leaking: _____

Stem: OK _____, Bent / Broken: _____

Nut: OK _____, Missing / Damaged: _____

Gears: OK _____, Faulty: _____

Lid: OK _____, Missing / Broken: _____, Replaced _____

Box: OK _____, Cold mixed *Yes / No* needed? *Yes / No*

Buried *Yes / No* _____, Protruding *Yes / No* _____"

Too Close to Operating Nut *Yes / No*

Other Problems / Work Needed: _____

_____

_____

Work / Repairs Completed:

_____ By: _____ Date ____/____/____

_____ By: _____ Date ____/____/____

_____ By: _____ Date ____/____/____

Inspection/Maintenance Completed by: _____ Date _____/_____/_____

Remarks on back of page _____ Yes _____ No

STORAGE INSPECTION REPORT

Elevated Tank/Reservoir Name or Location _____

		YES	NO	N/A
1.	Capacity: _____ Gallons			
2.	Ventilation provided			
3.	Ventilation screen ok?			
4.	Tank outlet through bottom			
5.	Tank inlet and outlet insulated			
6.	Overflow pipe flushed			
7.	Angle flap valve screen on overflow pipe ok?			
8.	Tank drain operated and flushed			
9.	Tank drain separate from inlet and outlet piping			
10.	Screen at discharge end of drain pipe ok?			
11.	Manhole cover			
	a. Lockable			
	b. Watertight			
	c. Overhanging			
12.	Exterior ladder(s) usable and access controlled			
13.	Interior ladder			
	a. Provided			
	b. Usable			
14.	Roof watertight			
15.	Steel tanks			
	a. Interior paint adequate			
	b. Exterior paint adequate			
16.	Liquid level controls checked			
17.	Low and high level alarm checked			
18.	Recent trespass or vandalism observed			
19.	Does drain/overflow discharge to storm system?			
20.	Does drain/overflow discharge to sewer?			
21.	Does drain/overflow discharge adequately?			

Other possible source of contamination: _____

_____

Improvements needed: _____

_____

Remarks: _____

_____

EQUIPMENT SERVICE CARD

EQUIPMENT:			
Item No.	Work to be Done	Frequency	
1		Daily	
2		Daily	
3		Daily	
4		Weekly	
5		Weekly	
6		Weekly	
7		Monthly	
8		Monthly	
9		Monthly	
10		Quarterly	
11		Quarterly	
12		Quarterly	
13		Bi-annually	
14		Bi-annually	
15		Bi-annually	
16		Annually	
17		Annually	
18		Annually	
19		Annually	

SERVICE RECORD CARD

EQUIPMENT:								
Date	Work Done (Item No.)	Signed	Date	Work Done (Item No.)	Signed	Date	Work Done (Item No.)	Signed

MINIMUM REQUIRED SPARE PARTS AND LUBRICANT

Item No.	Name	Supplier	Phone
1			
2			
3			
4			
5			
6			

Appendix N

Boil Water Notice

DRINKING WATER WARNING

The _____ Water System, ID_____, located in _____County is contaminated with fecal coliform/ *E. coli* bacteria.

Fecal coliform/ *E. coli* bacteria were detected/confirmed in the water supply on _____. These bacteria can make you sick and are a particular concern for people with weakened immune systems.

DO NOT DRINK THE WATER WITHOUT BOILING IT FIRST. Bring all water to a boil, let it boil 3 – 5 minutes, and let it cool before using. Boiled or purchased bottled water should be used for drinking, making ice, brushing teeth, washing dishes, and food preparation until *further notice*. Boiling kills bacteria and other organisms in the water.

Fecal coliforms and E. coli are bacteria whose presence indicates that the water may be contaminated with human or animal wastes. Microbes in these wastes can cause short-term effects, such as diarrhea, cramps, nausea, headaches, or other symptoms. They may pose a special health risk for infants, young children, some of the elderly, and people with severely compromised immune systems. The symptoms above are not caused only by organisms in drinking water. If you experience any of these symptoms and they persist, you may want to seek medical advice. People at increased risk should seek advice about drinking water from their health care provider.

What happened? What is the suspected or known source of contamination?

The following is being done to correct the problem:

We have consulted with the Washington State Department of Health about this incident. We will notify you when you no longer need to boil the water. We anticipate resolving the problem by _____.

For more information, please contact _____ at ( )___-_____ or at _____.
(owner or operator) (phone number) (address)

Please share this notice with all the other people who drink this water, especially those who may not have received this notice directly (for example, people in apartments, nursing homes, schools, and businesses). You can do this by posting this notice in a public place or distribution copies by hand or mail.

This notice is sent to you by _____ Water System on ___/___/____

Your logo or
company name here.

News Release

For Immediate Release: <DATE>
Contact: Water purveyor/system contact name and telephone number

<Water System> announces boil water advisory for all customers in <area>

CITY NAME — The <SYSTEM NAME> is advising all water customers to boil their drinking water after recent samples showed the presence of <fecal coliform, E. coli, total coliform>. The Washington State Department of Health (DOH) has been notified and <SYSTEM NAME> is working closely with the Office of Drinking Water to find the source of contamination and fix the problem, which may include disinfecting the system. The boil water advisory will remain in effect until further notice.

<System spokesperson quote> (e.g. "We are doing all we can to eliminate the bacteria from the water system. Safe and reliable drinking water is critical to good health and responding to this kind of emergency is our highest priority," said system spokesperson.)

<NUMBER or NO> illnesses related to the community's drinking water have been reported. To correct the problem <WHAT IS BEING DONE> (e.g. Chlorine was applied to the entire system on DATE.)

The boil water advisory includes several precautionary steps that customers should take. These include using purchased treated bottled water or boiled water for any water that might be consumed: drinking, brushing teeth, dishwashing, preparing food and making ice. Water should be boiled for 3-5 minutes, then allowed to cool before using.

The advisory will remain in effect until <SYSTEM NAME> and DOH are confident there is no longer a threat of illness to their customers. Once satisfactory results are reported, customers will be notified that the advisory has been lifted.

If you have any questions, please call us at <TELEPHONE NUMBER>.

###

Your logo or
company name here

News Release

For Immediate Release: <DATE>

Contact: Water purveyor/system contact name and telephone number

<Water System Name> Boil Water Advisory Rescinded

CITY NAME – The <SYSTEM NAME> is advising all its water customers that it is no longer necessary to boil their drinking water. Recent test samples show the absence of <fecal coliform, E. coli, total coliform> bacteria.

<SYSTEM SPOKESPERSON QUOTE> (e.g. "Working with the Washington State Department of Health over the last <NUMBER OF > days, we have completed inspections, water quality sampling, disinfection, and flushing to resolve the contamination problem," stated <NAME OF WATER SYSTEM MANAGER>. "We're pleased to be able to lift the boil water advisory."

The inspection of the water system indicated <DESCRIPTION OF SOURCE OF CONTAMINATION, if known, and what will be done to maintain good water quality>

If you have shut off or not used fixtures, water fountains, ice machines, soda machines, and/or other equipment over the past several days, flush the fixture or equipment until there is a change in water temperature before putting it back into service.

. The <SYSTEM NAME> encourages customers with questions to call <TELEPHONE NUMBER>.

###

Washington State Department of Health
Division of Environmental Health
Office of Drinking Water

PUBLIC NOTICE CERTIFICATION
Acute Coliform MCL

Within 10 days of notifying your customers, you must send a copy of each type of notice you distribute (hand-delivered notices, press releases, newspaper articles, etc.) to your Regional Office of Drinking Water. Also complete and send this form, which certifies that you have met all the public notification requirements. If the boil water advisory remains in effect more than three months, you must notify your water users again and provide another Public Notice Certification to the Department of Health. *With this certification, you are also stating that you will meet future requirements for notifying new billing units of the violation or situation.*

Water System:_____ ID #_____ County:_____

Violation Date:_____ / _____ / _____ Violation Type:_____

This public water system certifies that public notice has been given to water users, following state and federal requirements for delivery, content, and deadlines.

Complete the following items:

Yes No

☐ ☐ Distribution was completed on ___ / ___ /____. Check all that apply:
- ☐ Hand delivery,
- ☐ Press release (TV, radio, newspaper, etc.),
- ☐ Posting at_____ (by DOH approval only),
- ☐ Other _____ (by DOH approval only).

☐ ☐ Were the water users notified within 24 hours?

_____ _____ _____
Signature of owner or operator Position Date

Northwest Regional Office:
20435 72nd Ave. S., Suite 200
Kent WA 98032
Jennifer Prodzinski and
Carol Stuckey:
(253) 395-6775
Fax: (253) 395-6760

Southwest Regional Office:
2411 Pacific Ave.
PO Box 47823
Olympia WA 98504
Sandy Brentlinger:
(360) 753-5090
Fax (360) 664-8058

Eastern Regional Office:
1500 West Fourth Ave.
Suite 305
Spokane WA 99204
Pat McCaffery:
(509) 456-2788
Fax: (509) 456-2997

Appendix O

Cross Connection Control Program andResolution

Jon 87
12/15/98

ORDINANCE NO. 128-98

IN THE MATTER OF:

AN ORDINANCE ADOPTING A CROSS CONNECTION PROGRAM FOR THE HARTSTENE POINTE WATER SYSTEM.

WHEREAS, WAC 246-290-490 establishes cross connection control regulations;

WHEREAS, Purveyors (in this case Mason County) have the responsibility to protect public water systems from contamination due to cross connections. Cross connections which can be eliminated shall be eliminated;

WHEREAS, Mason County shall develop and implement a cross connection control program acceptable to the State Department of Health;

WHEREAS, notices (including public hearing notices) were sent to all property owners informing them of this cross connection proposal;

WHEREAS, the Board of County Commissioners held a public hearing on December 8, 1998, to consider the recommendation of the Department of Community Development on the proposed cross connection program;

WHEREAS, this hearing was advertised in the legal newspaper for Mason County;

NOW, THEREFORE, BE IT HEREBY ORDAINED, that the Board of County Commissioners of Mason County hereby adopts the Hartstene Pointe Cross Connection Control Program.

This ordinance shall be in full force and effective on this date.

DATED this 8th Day of December 1998.

Board of County Commissioners
Mason County, Washington

Absent 12/8/98
CHAIRPERSON

Cynthia Olsen
COMMISSIONER

Mary Jo Cady
COMMISSIONER

ATTEST:

Rebecca J. Rogers
CLERK OF THE BOARD

APPROVED AS TO FORM:

DEPUTY PROS. ATTORNEY

HARTSTENE POINTE
CROSS CONNECTION CONTROL PROGRAM
Ordinance No. 128-98
Adopted December 8, 1998

PURPOSE

The purpose of a Cross Connection Control Program is to protect the health of water consumers and the potability of the water system. This program is designed to maintain the quality of the Hartstene Pointe's public water supply by the elimination and prevention of cross connections between the distribution system and other sources of water or liquids used for other purposes. The policies and procedures presented in this program are designed in compliance with the Washington Administrative Code (WAC 246-290-490).

GENERAL

Except where specifically designated herein, all words used in this program shall carry their customary meanings. Words used in the present tense shall include the future, and all plural words shall include the singular. The word "shall" indicates a mandatory action, and the word "may" denotes a use of discretion in making a decision.

DEFINITIONS

Air Gap Separation (AG): Shall mean the unobstructed vertical distance through the free atmosphere between the lowest opening from any pipe or faucet supplying water to a tank, plumbing fixture, or other assembly, and the maximum flood level rim of the receptacle. This gap shall be at least double the diameter of the supply pipe measured vertically above the flood rim of the vessel. In no case shall this gap be less than one (1) inch.

Approved Backflow Prevention Assembly: Shall mean any assembly to prevent backflow that has been approved for use by the System Manager and the Washington State Department of Health. Approved assemblies shall be those that have successfully passed performance tests of the University of Southern California Engineering Center or another approved testing laboratory.

Atmospheric Vacuum Breaker (AVB): Shall mean a backflow prevention assembly which is operated by atmospheric pressure in combination with the force of gravity. The unit is so designed to work on a vertical plane only. The moving part consists of a poppet valve, which must be carefully sized to slide in a guided chamber and effectively shut off the reverse flow of water when a negative pressure exists in the supply system. An AVB is designed to protect against back siphonage events only.

Auxiliary Supply: Shall mean any water supply on or available to the premises other than the County public water supply.

Backflow: Shall mean the flow, other than in the intended direction of flow, of any foreign liquids, gasses or other substances (including water) into the distribution system of the public water supply.

Backflow Assembly Tester: Shall be a person certified by Washington State in the inspection and testing of approved backflow prevention devices.

Back Pressure: Shall mean any induced pressure caused by a pump, elevated tank, boiler, pressure vessel, or any other means that could create pressure within a customer's system greater than the operating pressure of the public water supply distribution system.

Back Siphonage: Shall mean backflow of water due to a negative or reduced pressure within the water system.

Building Inspector: Shall be a Building Inspector of Mason County.

County Inspector: Shall be that person or persons employed by the County that have been trained and are qualified to perform the designated inspection work.

Cross Connection: Shall mean any actual or potential connection whereby a public water supply is connected, directly or indirectly, with any other water supply system, sewer, drain, conduit, pool, storage reservoir, plumbing fixture or other assembly which contains, or may contain, contaminated water, sewage or other waste or liquid of unknown or unsafe quality, which may be capable of imparting contamination to the public water supply system as a result of backflow (reversed flow).

Customer: Shall mean any person, persons, firm or corporation that is furnished potable water from the public water supply system through a legal service connection to the public water supply distribution system.

Double Check Detector Assembly (DCDA): Shall mean an assembly composed of two (2) single, independently acting, approved check valves, including tightly closing shut-off valves located at each end of the assembly and suitable connections for testing the water tightness of each check valve. The assembly shall also have a factory installed bypass feature, with an approved DCVA designated to monitor low flows on low hazard fire systems. The bypass feature is used to detect unauthorized use of the water allocated for fire protection and/or to detect leaks in the fire system. The DCDA is used to protect the water system from both back siphonage and back pressure events and is not suitable for use in protecting the water system from health threatening substances.

Double Check Valve Assembly (DCVA): Shall mean a assembly composed of two (2) single, independently acting, approved check valves, including resilient seated shut-off valves located at each end of the assembly and properly located test cocks to test the water tightness of each check valve. Double check valve assemblies are designed to protect the water supply system from both

back siphonage and back pressure events. They are not suitable for use in protecting the water system from health threatening substances.

Hazards:

Degree: Shall express the results of an evaluation of a health, system, or plumbing hazard.

Health: Shall mean any condition, assembly, or practice in a water supply system and/or its operation that creates, or may create, a danger to the health and well-being of a customer.

Plumbing: Shall mean a potential or existing cross connection in a customer's water system that may permit back siphonage in the event of a negative or reduced pressure in the supply line.

System: Shall mean a threat to the physical properties of the public or the customer's potable water system by a material not dangerous to health, but aesthetically objectionable and having a degrading effect on the quality of the potable water within the system.

Industrial Fluids: Shall mean any fluid or solution which may be chemically, biologically, or otherwise contaminated or polluted in a form or concentration that would constitute a health or plumbing hazard if introduced into a potable water supply. This may include, but is not limited to, all types of processed waters originating from the public water or auxiliary supply, which may deteriorate in sanitary quality. Types of processed waters include chemicals in fluid form, circulated cooling waters that are chemically or biologically treated or stabilized with toxic substance, and contaminated natural waters, as from springs, stream, or ponds.

Liquids: Shall mean any substance that flows readily but does not expand indefinitely, such as water and industrial fluids.

Mason County Department of Community Development: Shall also be referred to as the County, herein.

Pressure Vacuum Breaker Assembly (PVBA): Shall mean a backflow prevention assembly which consists of a spring-loaded check valve, an independently operating air-inlet valve, inlet and discharge shut-off valves, and properly installed test cocks. The air-inlet valve is internally loaded to the open position, normally by means of a spring. This internal loading allows the device to be installed on the pressure side of the shut-off valve. A PVBA is designed to protect against back siphonage events only.

Public Health Officer: Shall be the duly appointed Public Health Officer of the Southwest Washington Health District. Any act in this program required or authorized by the Public Health Officer may be done on his/her behalf by an authorized representative of the Washington State Department of Health.

Public Water Supply: Shall be the system operated and maintained by the County, which is a water supply intended or used for human consumption or other domestic use. The public water supply system includes source, storage, transmission and distribution facilities where water is furnished by the County to the customers of the County.

Reduced Pressure Principal Backflow Prevention Assembly (RPBA): Shall mean an assembly containing a minimum of two (2) independently acting, approved check valves, together with an automatically operated pressure differential relief valve located between the two check valves. During normal flow the pressure between these two checks shall be less than the upstream (supply) pressure. In case of leakage of either check valve, the differential valve, by discharging to the atmosphere, shall operate to maintain not less than two (2) pounds per square inch (psi) of pressure between the supply pressure and the zone between the two check valves. The unit must include resilient seated shut-off valves located at each end of the assembly, and each assembly shall be fitted with properly located test cocks.

Service Connection: Shall mean a connection between the public water supply distribution system and the customer's system.

System Manager: Shall mean the Water System Manager, Mason County, Washington. Any act in this program required or authorized by the System Manager may be done on his/her behalf by an authorized representative of Mason County.

CODE AUTHORITY AND ENFORCEMENT

The enforcement of this cross connection program, in the area served by the Hartstene Pointe Water System, shall be in accordance with the Uniform Plumbing Code, latest Edition, and WAC 246-290, Rules and Regulations of the State Board of Health relating to public water supplies.

GENERAL POLICY

It is the intention of this program to provide for the permanent abatement or control of all cross connections. Where it is physically and economically infeasible to find or to permanently eliminate all cross connection of the customer's water system, and when it is deemed necessary by the appropriate inspector, there shall be installed at the service connection a suitable backflow prevention assembly commensurate with the degree of hazard to the public water supply.

The following methods of cross connection control are considered minimum protection at the service connection:

1. The public water supply to a premises having an auxiliary water supply from an additional public supply with no known cross connection shall require an approved DCVA at the service connection.

2. The public water supply to a premises on which is handled a substance that is objectionable (not a health hazard) in a manner constituting a potential cross connection shall require a DCVA at the service connection.

3. The public water supply to a premises on which there is an auxiliary water supply and internal cross connections that are not correctable or intricate plumbing arrangements which make it impractical to ascertain whether or not cross connection exist, shall require a RPBA at the service connection.

4. The public water supply to a premises on which material dangerous to health or toxic substances are handled shall have installed a RPBA at the service connection.

5. The public water supply to a premises where entry is restricted so that inspection for cross connection cannot be made at a sufficient frequency or a sufficient short notice to assure that cross connection do not exist shall have shall have installed a RPBA at the service connection.

6. The public water supply to a premises on which any substance is handled under pressure so as to permit entry into the public water supply, or where a cross connection could reasonably be expected to occur, shall have installed a RPBA or DCVA, according to the health hazard at the service connection.

7. The public water supply to a premises having a repeated history of cross connections being established or re-established, shall have installed a RPBA at the service connection.

SURVEILLANCE PROGRAM

The County is charged with the responsibility of ensuring that the public water supply is not compromised by events resulting from cross connections. As such, a surveillance program based on proper management, adequate record keeping, and aggressive inspections must be properly implemented by the County.

Such a program for cross connections initially requires the inspection of all new and existing buildings, structures, and grounds. The procedure requires the County Inspector(s) and the Building Inspector(s) to assist with the requirements of the Department of Health. Each must be knowledgeable in the field of plumbing and building inspection, pipe arrangements, and cross connection control.

The systematic program of inspection shall be established with priority given on the basis of risk to public health and shall be conducted according to the following outline:

A. New and Proposed Construction

1) Upon application for a building permit, the Building Inspector shall require a detailed set of plans and specifications for the plumbing installations, and shall make such detailed plans and specifications available to the County Inspector.

2) The Building Inspector and the County Inspector shall review these plans and specifications to determine the probability of cross connections, the availability of auxiliary water supplies, the handling of substances which, if introduced into the water system, would constitute a health, plumbing, or system hazard. If, upon review, it is determined that any of these conditions will exist, the County Inspector shall coordinate with the property owner to ensure such cross connections are properly controlled, or eliminated.

3) During the construction phase of any new building, structure, or ground installation, and during the regular plumbing inspection, the County Inspector shall perform the required cross connection control inspection. Upon completion of the inspection, but prior to the approval of any water service connection, the County Inspector shall advise the customer in writing that further backflow prevention testing is, or is not, required. The customer shall also be notified that a Washington State certified backflow assembly tester must test the backflow assembly, and that the test report form completed by the certified tester must be received by the County Inspector prior to the regular use of the customer's water system.

4) Upon receipt of an application for new water service, but prior to the installation of such new service, a cross connection inspection shall be made by the County Inspector and required backflow prevention assemblies shall be installed at the time the new service is installed.

B. Existing Buildings, Structures, and Grounds

1) An initial survey of the water system customers shall be conducted by the County to determine if any cross connections currently exist. The initial cross connection determination shall proceed according to the following steps:

(a) A survey form shall be sent to each customer explaining the program and stressing the relationship between cross connections and water-borne disease epidemics, types of health hazards, and cross connections. The survey shall also include a brief questionnaire with desired information, such as an auxiliary water supply, any chemicals used, and certain types fixtures installed. This survey shall be returned by the water system customer to the County.

(b) Based upon the responses received from the questionnaire, if the County determines that a customer has a potential cross connection, a letter requesting an appointment for inspection by the County Inspector shall be sent to the water system customer.

(c) Upon completion of the inspection, the County Inspector shall orally brief the customer or his/her representative of the inspection findings.

(d) The County Inspector shall prepare a written report for the water system customer and the System Manager that shall include the following information:

1. Complete identifying information contained in heading.
2. List of all potential or actual cross connections found, including the location and options for method of control for each.
3. List of any industrial fluids, chemicals or other contaminating liquids used or pumped under pressure, the use of each, and an indication of the probability of cross connection.
4. Any applicable drawings, sketches, blueprints, etc. used in support of the inspection.
5. A summary of the findings of the inspection.
6. Recommendations for actions to be taken by the customer.

(e) The System Manager, upon completion of review of the report, shall prepare a letter to the customer outlining the corrective action required, and the time period in which the corrective action must be completed. A copy of this letter shall be sent to the customer (return receipt requested), and a copy shall be maintained at the County.

(g) When all required actions have been completed, the file copy of the completed actions shall be placed in the County's cross connection control file.

(h) Each premises required to be in compliance with the program shall be re-inspected annually, or more often if the degree of hazard so indicates.

2) The backflow prevention devices at the wastewater treatment plant and the community center shall be inspected and tested annually by certified backflow assembly tester.

CORRECTIVE MEASURES

Corrective measures for cross connections shall follow the guidelines in the most recently published Accepted Procedure and Practice in Cross Connection Control, of the Pacific Northwest Section (PNWS) of the American Water Works Association (AWWA).

CODE

The following are the abbreviations for assemblies or methods used to prevent or eliminate cross connections:

1)	Air Gap	AG
2)	Reduced Pressure Backflow Assembly	RPBA
3)	Double Check Valve Assembly	DCVA
4)	Double Check Detector Assembly	DCDA
5)	Pressure Vacuum Breaker Assembly	PVBA
6)	Atmospheric Vacuum Breaker	AVB

PROCEDURES FOR INSTALLATION, INSPECTION, AND MAINTENANCE OF BACKFLOW -PREVENTION ASSEMBLIES

A. Initial Installation

1) When it is determined that a RPBA, DCVA, DCDA, PVBA, or AVB is required, the County shall inform the owner/manager of the need for a device.

2) Approved assemblies shall be installed as specified in the Uniform Plumbing Code, the PNWS-AWWA Cross Connection Control Manual, or the Hartstene Pointe Water System Design Standards, whichever is the more restrictive.

3) Upon completion of the installation of the backflow assembly, a certified backflow assembly tester shall make such tests as are required to ensure proper operation of the assembly. If the assembly fails any portion of the test, the assembly shall be rejected until such time that a repaired or a replaced assembly passes all portions of the tests. The test results shall then be supplied to the County.

B. Inspection and Maintenance

1) All backflow prevention assemblies shall be tested not less than annually. The testing shall be made by a certified backflow prevention assembly tester, and the results are to be forwarded to the County.

2) Maintenance

(a) When a backflow prevention assembly is determined to be defective, the tester shall notify the County immediately.

(b) Upon receipt of notification of the defective assembly, the customer shall take the necessary steps to repair or replace the defective assembly. The defective assembly shall be repaired or replaced by a qualified person, who has specific training in backflow prevention assembly repair.

(c) Upon completion of repair or replacement, the backflow prevention assembly shall be tested by a certified backflow prevention assembly tester.

RECORDS AND REPORTS

A. The County shall track each customer utilizing a cross connection device.

B. The following information shall be available through the County's record keeping program.

1) Information regarding installations
2) Test results for installations.
3) Information about testers
4) Tester's certification histories.
5) Mailing addresses of installation owners.
6) Device manufacturers and model and approved status.

HARTSTENE POINTE
CROSS CONNECTION CONTROL PROGRAM SURVEY

In order to protect the public potable water supply from possible contamination or pollution due to backflow from a customer's private internal system, Mason County has established a Cross Connection Control Program. The County recognizes that there are varying degrees of risks associated with different types of uses and will consider this when determining if a cross connection exists and what, if any backflow prevention device will be required.

Please complete the following survey and return it to _____.

Name_____

Address_____

Phone Number _____ Alt. Phone Number_____

1. Please indicate if your home has or will have any of the following fixtures, equipment, or areas on site:

	Yes	No
Fire sprinkler system	___	___
Irrigation system	___	___
Air conditioning system	___	___
Bathtub, below rim filter	___	___
Bidets	___	___
Boiler feed lines	___	___
Decorative ponds	___	___
Dialysis Equipment	___	___
Floor drains	___	___
Flushing floor drains	___	___
Heat exchangers	___	___
Heat pumps	___	___
Hose bibbs	___	___
Hot tub	___	___
Sumps	___	___
Photo developing sinks	___	___
Sewer connected equipment	___	___

2. Please provide the following information on any existing backflow protection that you are aware of:

Existing Cross Connection Protection

Hazard/Location	Assembly Type	Make	Model	Serial #	Testing Information

3. Please provide the name of any products or chemicals that you mix with water for use in your home, such as fertilizers, etc.

_____

Thank you for your attention to this matter. Please call _____ at _____ if you have any questions or concerns.

Appendix P

Construction Standards

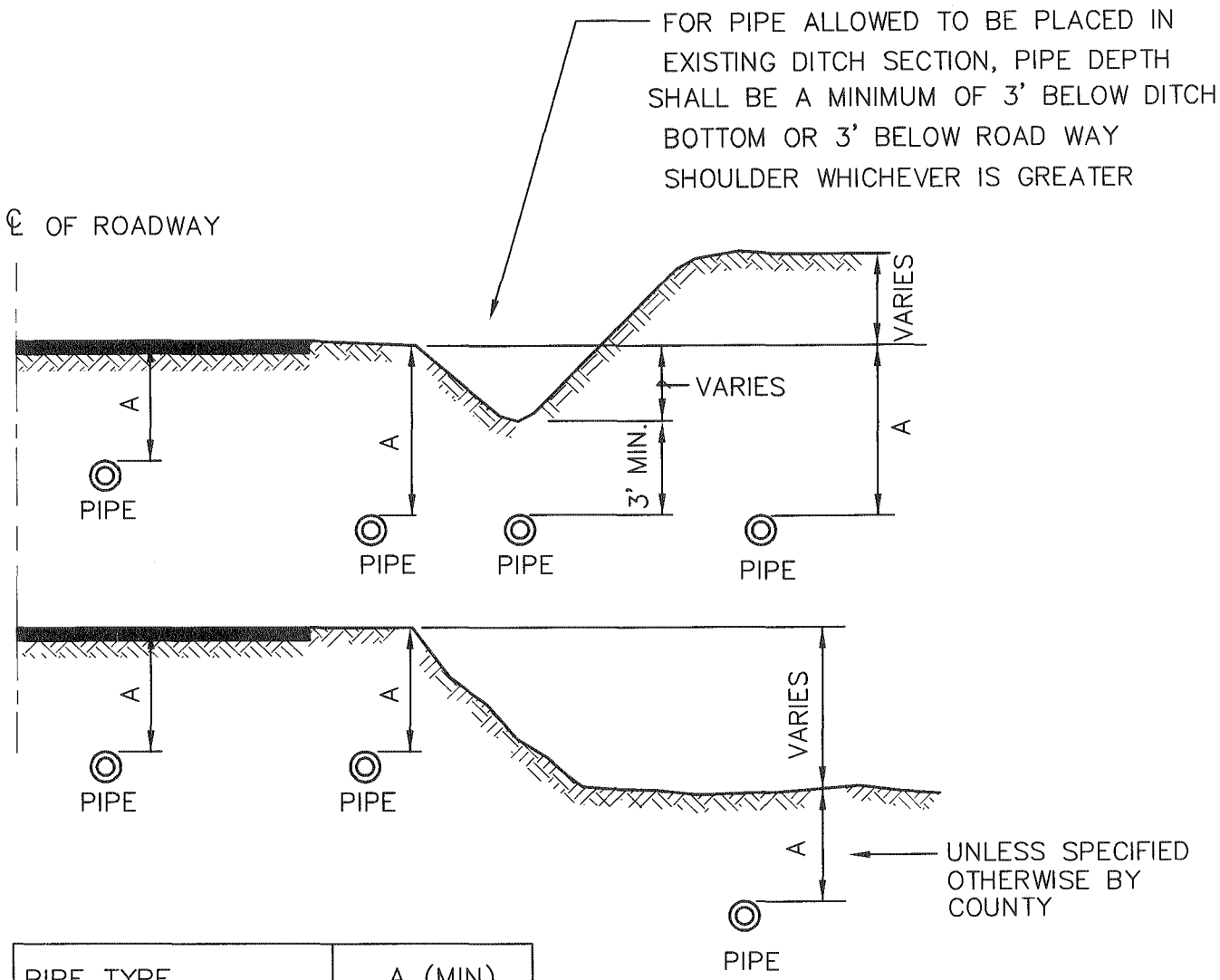

PIPE TYPE	A (MIN)
TRANSMISSION	42"
DISTRIBUTION	36"

HARTSTENE POINTE WATER STANDARD DETAILS			
WATER MAIN DEPTH REQUIREMENTS			
APPROVED: OPERATIONS MANAGER DATE			DWG. NO. 1
DATE: 4/98	DRWN: Q.M.T.	CHKD: T.P.	SCALE: NONE

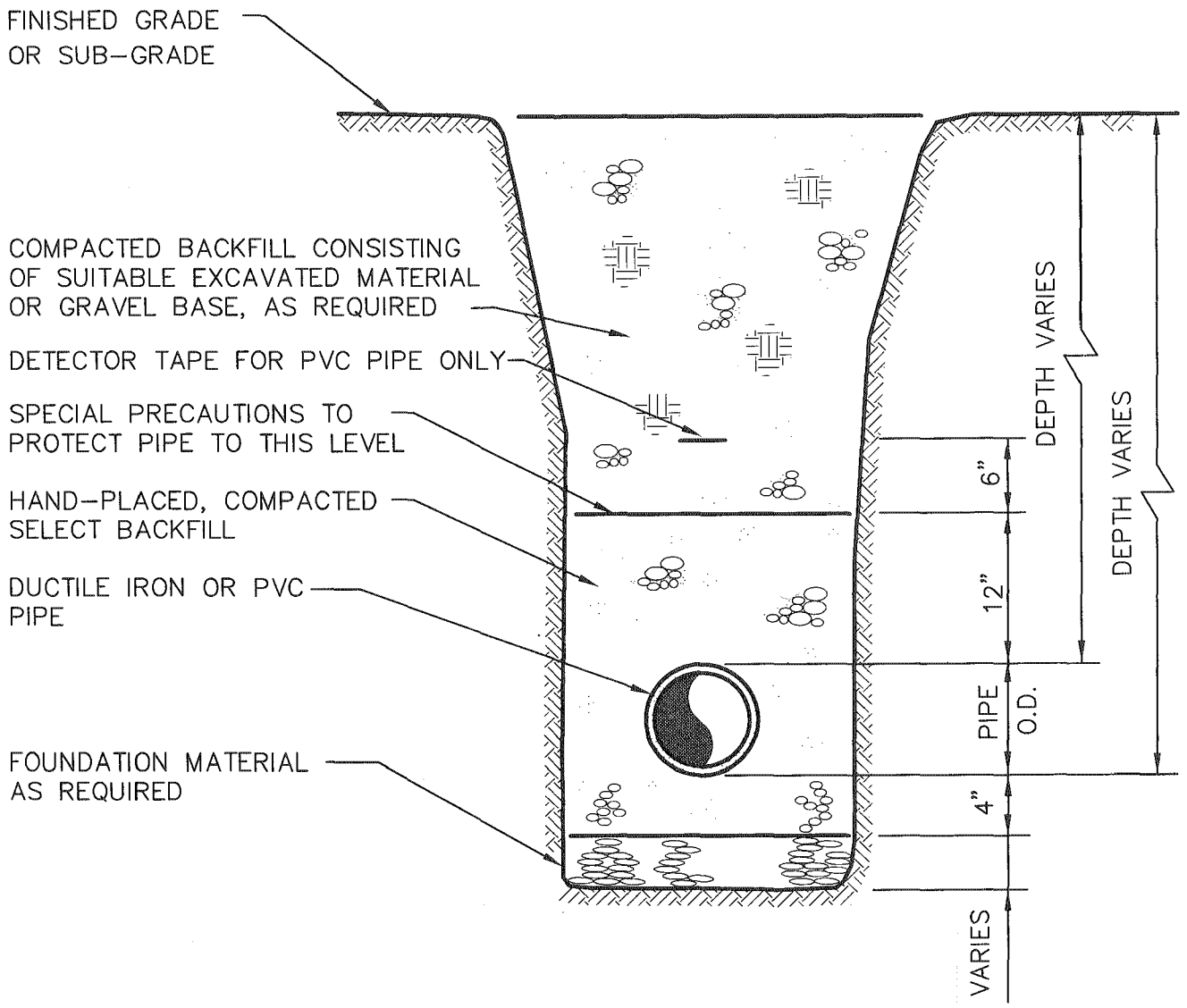

NOTE:

BACKFILL MATERIAL AND COMPACTION SHALL
BE IN CONFORMANCE WITH COMMUNITY STANDARDS
AND\OR THE MASON COUNTY PERMIT REQUIREMENTS,
AS MAY BE APPLICABLE

HARTSTENE POINTE WATER STANDARD DETAILS			
WATER MAIN TRENCH SECTION			
APPROVED: OPERATIONS MANAGER DATE			DWG. NO. 2
DATE: 4/98	DRWN: Q.M.T.	CHKD: T.P.	SCALE: NONE

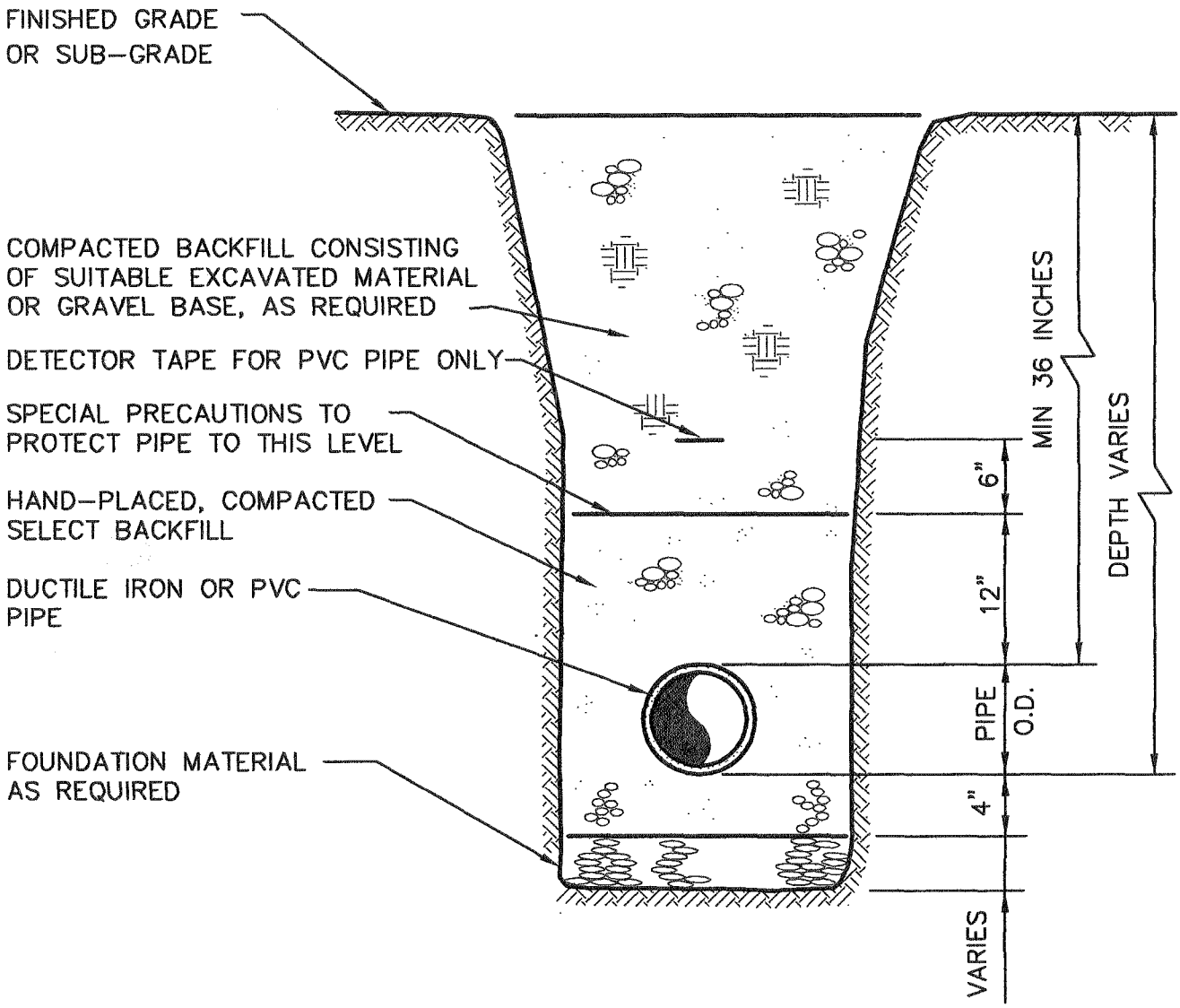

NOTE:

BACKFILL MATERIAL AND COMPACTION SHALL
BE IN CONFORMANCE WITH COMMUNITY STANDARDS
AND\OR THE MASON COUNTY PERMIT REQUIREMENTS,
AS MAY BE APPLICABLE

HARTSTENE POINTE WATER STANDARD DETAILS			
WATER MAIN TRENCH SECTION			
APPROVED: OPERATIONS MANAGER DATE			DWG. NO. 2
DATE: 4/98	DRWN: Q.M.T.	CHKD: T.P.	SCALE: NONE

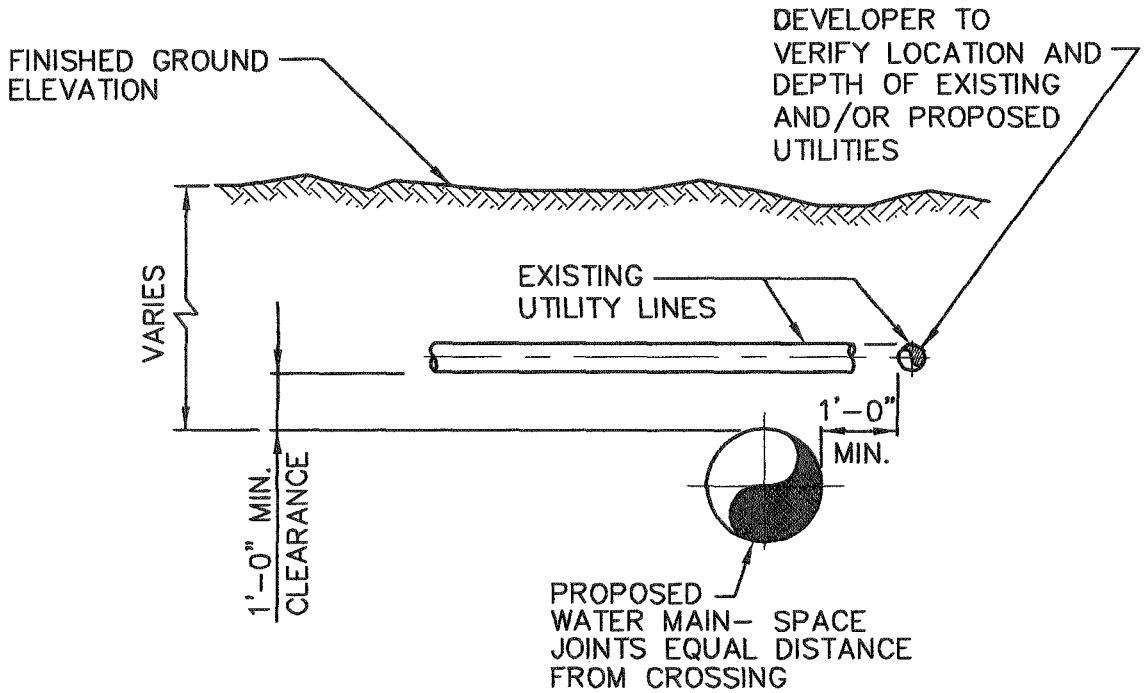

NOTE: CONCRETE ENCASEMENT (BEDDING) SHALL BE UTILIZED, IF APPROVED BY THE COMMUNITY, AT LOCALIZED UTILITY CROSSING IF MINIMUM PIPE SEPARATION (ELEVATION) CANNOT BE MAINTAINED / ACHIEVED.

MINIMUM DEPTH OF FILL OVER DISTRIBUTION PIPE SHALL BE 36"

HARTSTENE POINTE WATER STANDARD DETAILS			
TYPICAL UTILITY CROSSING			
APPROVED: OPERATIONS MANAGERS DATE			DWG. NO. 3
DATE: 4/98	DRWN: Q.M.T.	CHKD: T.P.	SCALE: NONE

MINIMUM BEARING AREA TABLE					
FITTING D	TEE	90°	45°	22 1/2°	11 1/4°
6"	4 SQ.FT.	6 SQ.FT.	3 SQ.FT.	2 SQ.FT.	2 SQ.FT.
8"	7 SQ.FT.	10 SQ.FT.	6 SQ.FT.	3 SQ.FT.	2 SQ.FT.
10"	10 SQ.FT.	15 SQ.FT.	9 SQ.FT.	5 SQ.FT.	3 SQ.FT.
12"	14 SQ.FT.	22 SQ.FT.	12 SQ.FT.	6 SQ.FT.	4 SQ.FT.
16"	25 SQ.FT.	38 SQ.FT.	21 SQ.FT.	11 SQ.FT.	7 SQ.FT.
18"	32 SQ.FT.	48 SQ.FT.	27 SQ.FT.	14 SQ.FT.	8 SQ.FT.

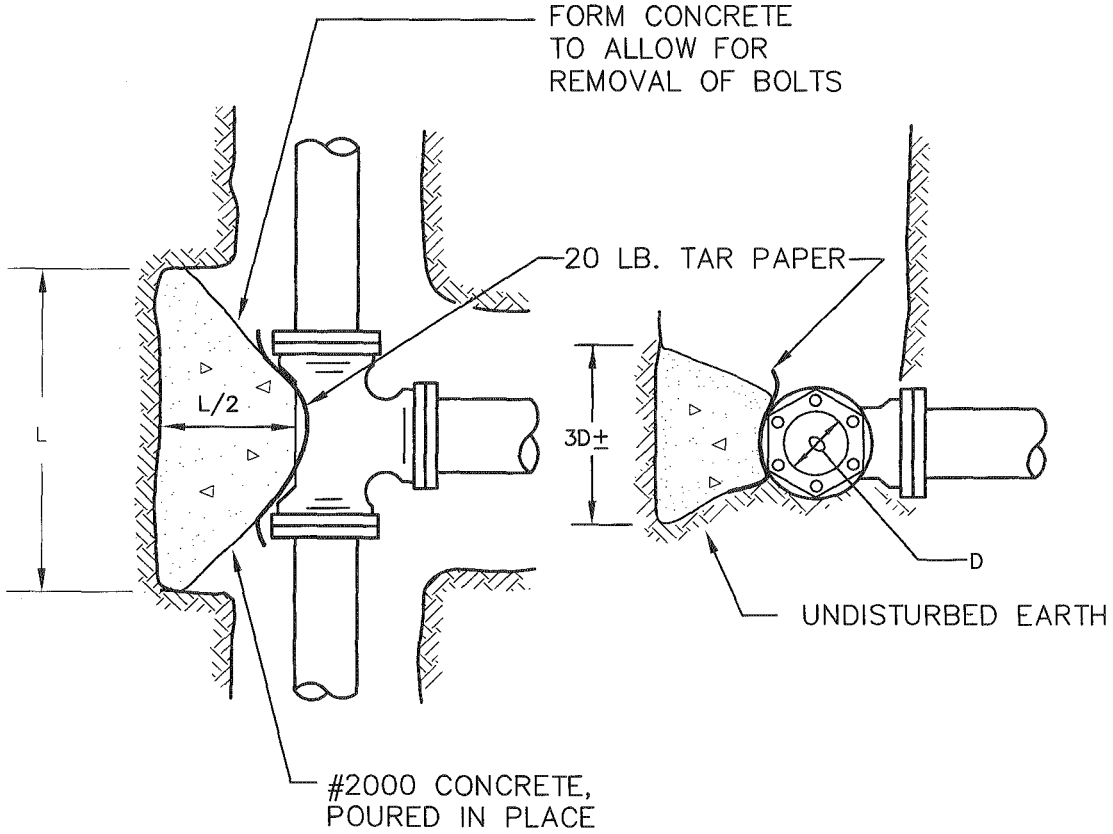

PLAN **ELEVATION**

NOTE:
BEARING AREA TABLE BASED ON 250 PSI PRESSURE AND 2000 PSF SOIL BEARING. IF PRESSURE IS GREATER OR SOIL BEARING IS LESS, THE THRUST BLOCK SIZE SHALL BE INCREASED.

THIS TABLE REPRESENTS THE "MINIMUM" CONSTRUCTION STANDARDS. THE DEVELOPER'S ENGINEER SHALL BE RESPONSIBLE FOR DETERMINING THE APPROPRIATE SIZE OF ALL THRUST BLOCKS BASED ON EXISTING AND LOCAL CONDITIONS.

HARTSTENE POINTE WATER STANDARD DETAILS			
CONCRETE THRUST BLOCK			
APPROVED: OPERATIONS MANAGER DATE			DWG. NO. 4
DATE: 4/98	DRWN: Q.M.T.	CHKD: T.P.	SCALE: NONE

TYPE "A" BLOCKING
FOR 11 1/4°–22 1/2°–30° VERTICAL BENDS

PIPE SIZE NOMINAL DIAMETER– INCHES	TEST PRESSURE PSI	VB VERTICAL BEND DEGREES	No. OF CU. FT. OF CONC. BLOCKING	S SIDE OF CUBE LIN. FT.	D DIAM. OF SHACKLE RODS (2) INCHES	L DEPTH OF RODS IN CONCRETE LIN. FT.
4"	300	11 1/4	8	2	5/8"	1.5
		22 1/2	11	2.2		2.0
		30	17	2.6		
6"	300	11 1/4	11	2.2	5/8"	2.0
		22 1/2	25	2.9		
		30	41	3.5		
8"	300	11 1/4	16	2.5	5/8"	2.0
		22 1/2	47	3.6		
		30	70	4.1	3/4"	2.5
12"	250	11 1/4	32	3.2	5/8"	2.0
		22 1/2	88	4.5	7/8"	3.0
		30	132	5.1		
16"	225	11 1/4	70	4.1	7/8"	3.0
		22 1/2	184	5.7	1 1/8"	4.0
		30	275	6.5	1 1/4"	
20"	200	11 1/4	91	4.5	7/8"	3.0
		22 1/2	225	6.1	1 1/4"	4.0
		30	330	6.9	1 3/8"	4.5
24"	200	11 1/4	128	5.0	1"	3.5
		22 1/2	320	6.8	1 3/8"	4.5
		30	480	7.9	1 7/8"	5.5

TYPE "B" BLOCKING
FOR – 45° VERTICAL BENDS

		VB		S	D	L
4"	300	45	30	3.1	5/8"	2.0
6"			68	4.1		
8"			123	5.0		
12"	250		232	6.1	3/4"	2.5
16"	225		478	7.8	1 1/8"	4.0
20"	200		560	8.2	1 1/4"	
24"			820	9.4	1 3/8"	4.5

THIS TABLE REPRESENTS THE "MINIMUM' CONSTRUCTION STANDARD. THE DEVELOPER'S ENGINEER SHALL BE RESPONSIBLE FOR DETERMINING THE APPROPRIATE SIZE OF ALL ANCHOR BLOCKS BASED ON EXISTING AND LOCAL CONDITIONS.

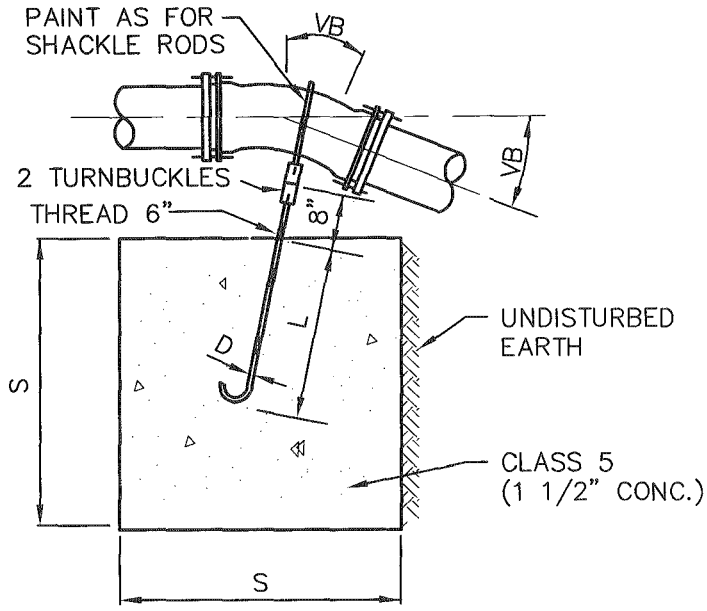

TYPE "A" BLOCKING

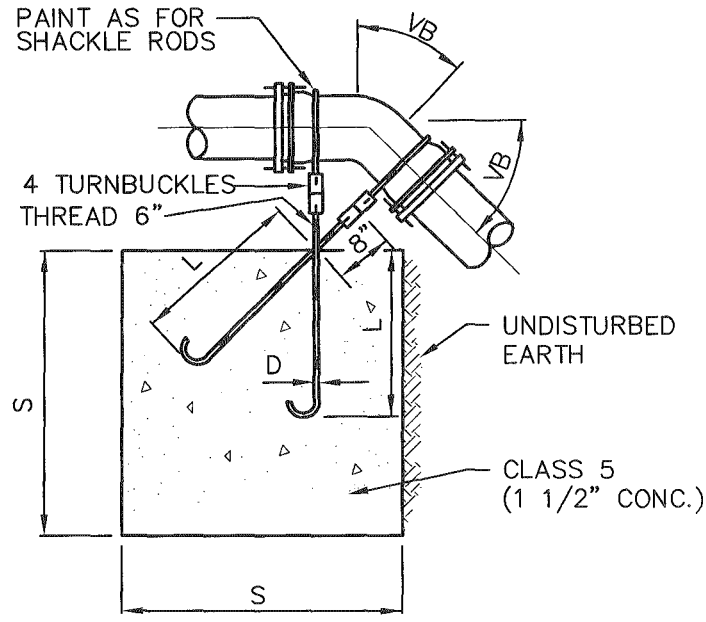

TYPE "B" BLOCKING

HARTSTENE POINTE
WATER STANDARD DETAILS

VERTICAL ANCHOR BLOCK

APPROVED:

OPERATIONS MANAGER DATE

DWG. NO. 5

DATE:	DRWN:	CHKD:	SCALE:
4/98	Q.M.T.	T.P.	NONE

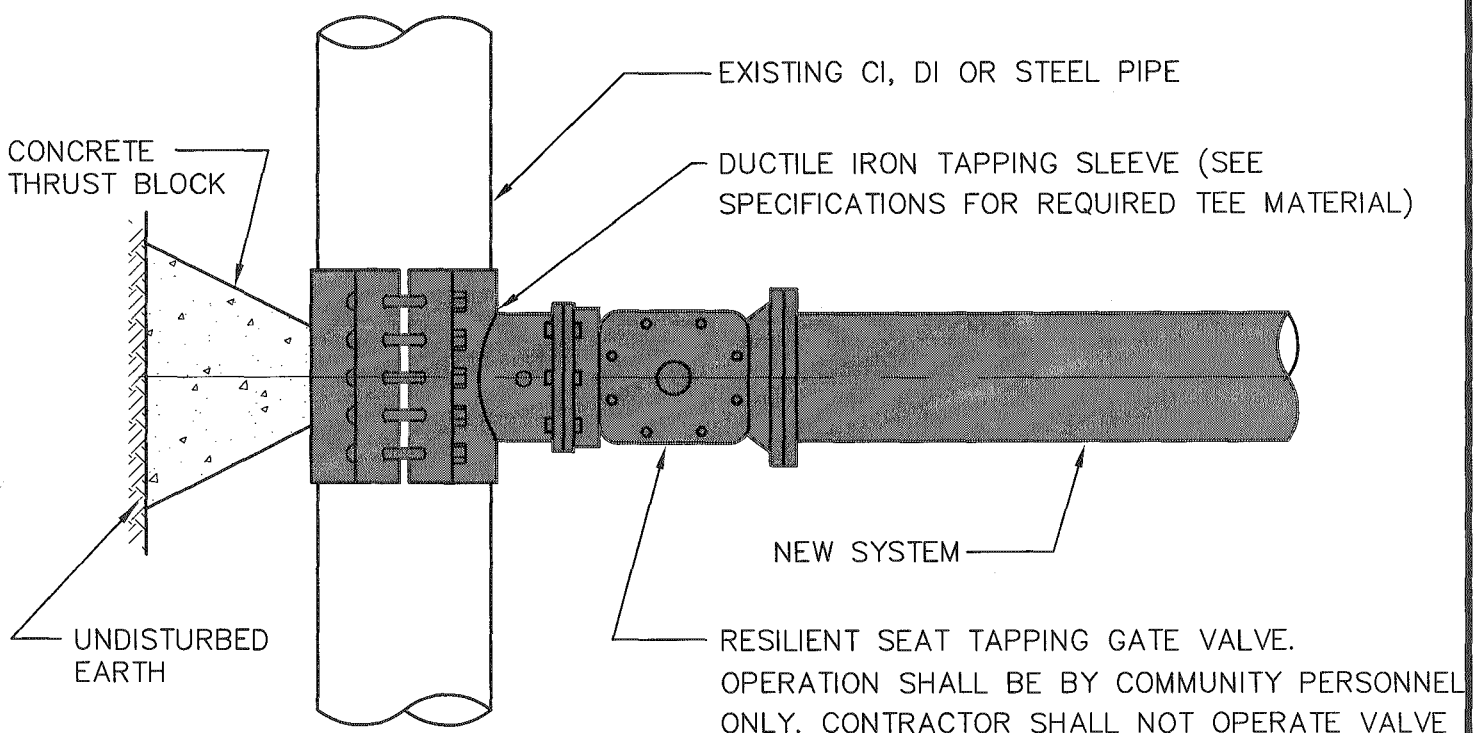

NOTE:

1. VALVE BOX TO HAVE A LOCKING LID UNTIL ACCEPTED BY THE COMMUNITY

2. O.D. STEEL PIPE SHALL USE S.S. SLEEVE (FUSION COATED)

3. STAINLESS STEEL SLEEVE SHOWN FOR ILLUSTRATIVE PURPOSES ONLY

HARTSTENE POINTE WATER STANDARD DETAILS			
WET TAP CONNECTION			
APPROVED: OPERATIONS MANAGER DATE			DWG. NO. 6
DATE: 4/98	DRWN: Q.M.T.	CHKD: T.P.	SCALE: NONE

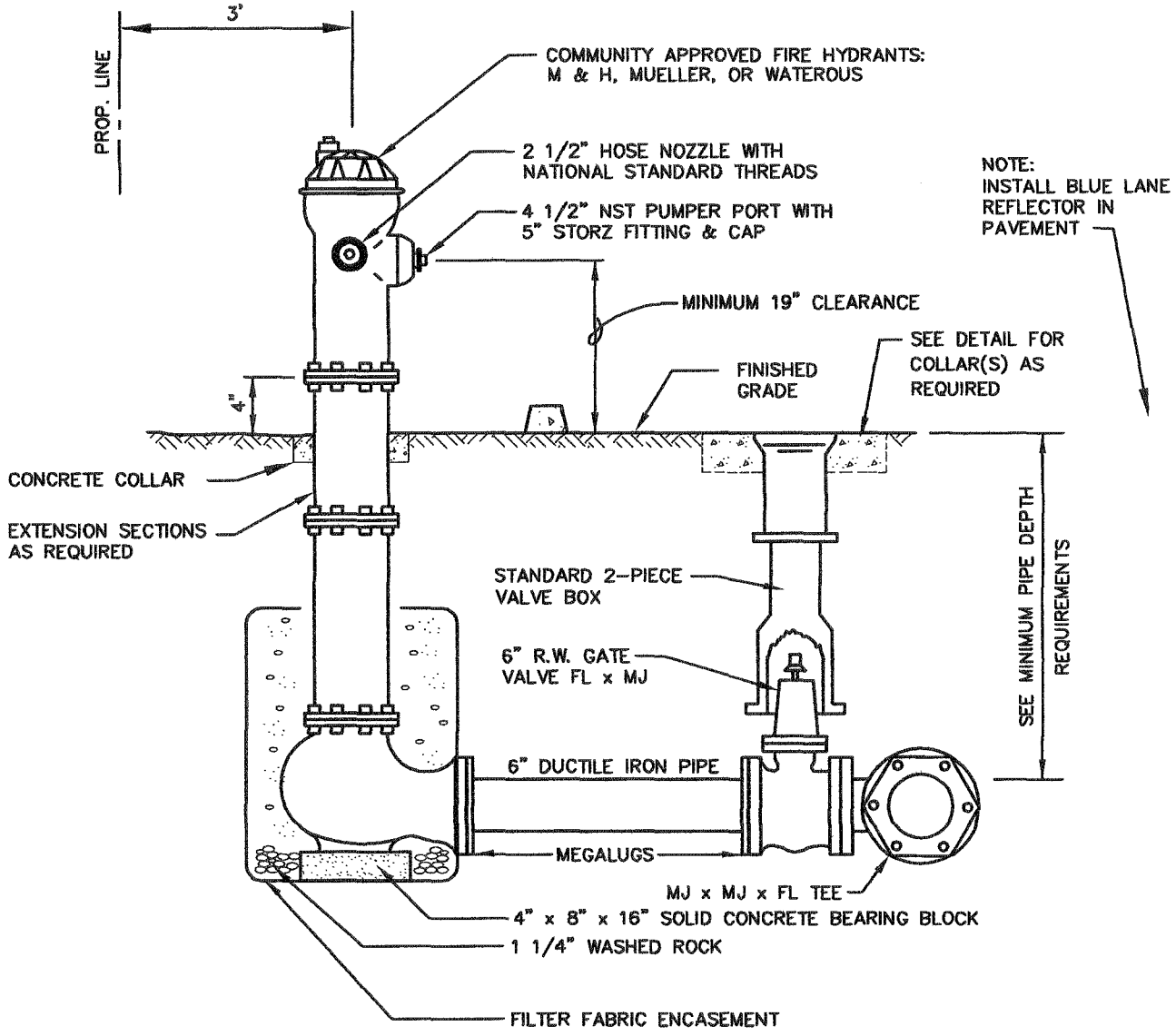

PAINT FIRE HYDRANT (RED)
PER HARTSTENE POINTE STANDARDS

HARTSTENE POINTE WATER STANDARD DETAILS			
FIRE HYDRANT INSTALLATION			
APPROVED: OPERATIONS MANAGER DATE			DWG. NO. 8
DATE: 4/98	DRWN: Q.M.T.	CHKD: T.P.	SCALE: NONE

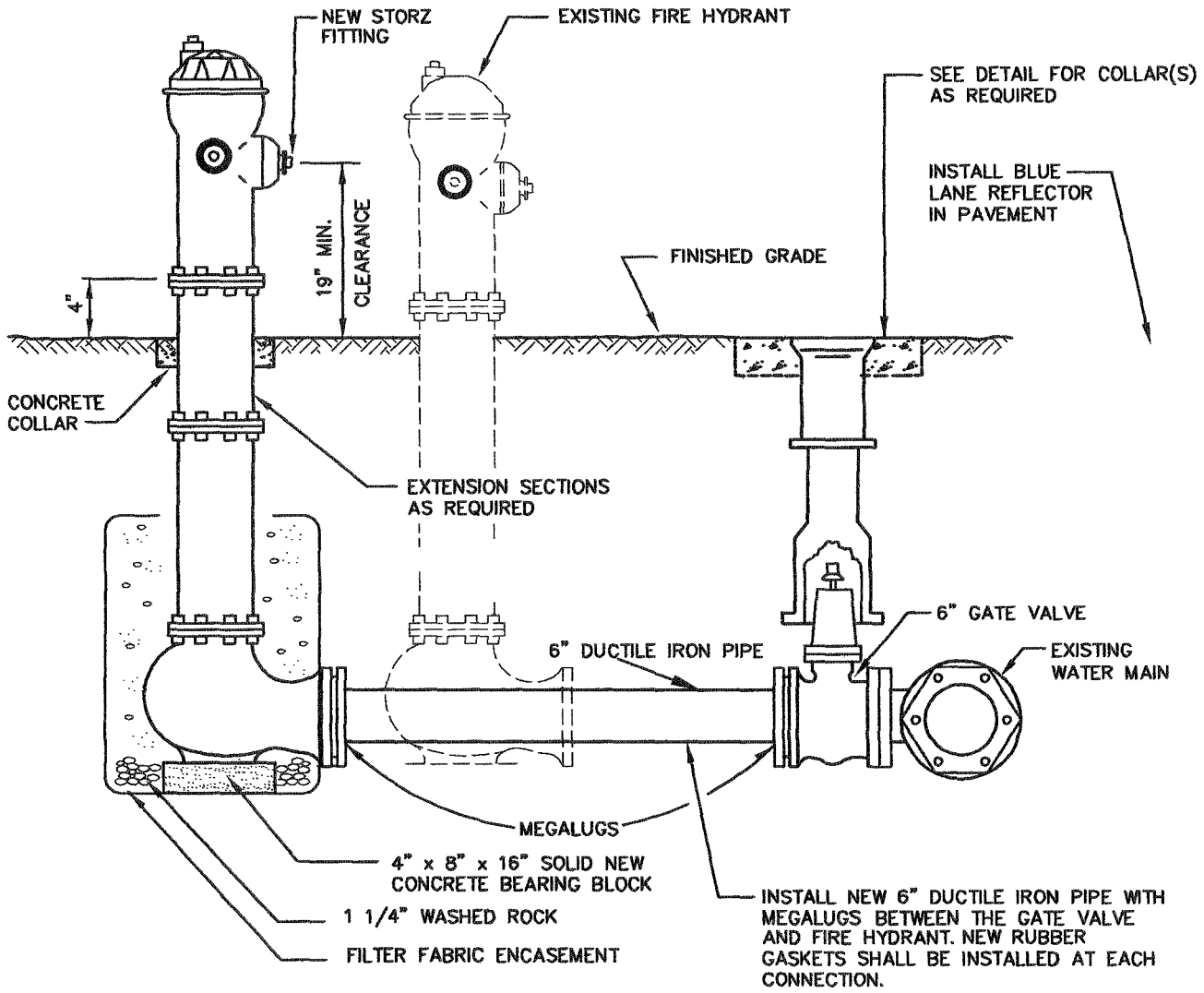

NOTES :

1. ALL RELOCATED FIRE HYDRANTS SHALL HAVE 4 1/2" PUMPER PORTS WITH STORZ ADAPTER (DEVELOPER PROVIDE)
2. PROVIDE 15' OF 12" (MIN.) STORM PIPE IN ANY ADJACENT DITCH SECTION. RIP-RAP ENDS AND FILL ABANDONED DITCH SECTION
3. PROVIDE MIN. 3' - 0" CLEARANCE AND LEVEL AREA AROUND RELOCATED HYDRANT
4. REPAINT FIRE HYDRANT (RED) PER HARTSTENE POINTE STANDARDS

HARTSTENE POINTE WATER STANDARD DETAILS			
FIRE HYDRANT RELOCATION			
APPROVED: OPERATIONS MANAGER DATE			DWG. NO. 9
DATE: 4/98	DRWN: Q.M.T.	CHKD: T.P.	SCALE: NONE

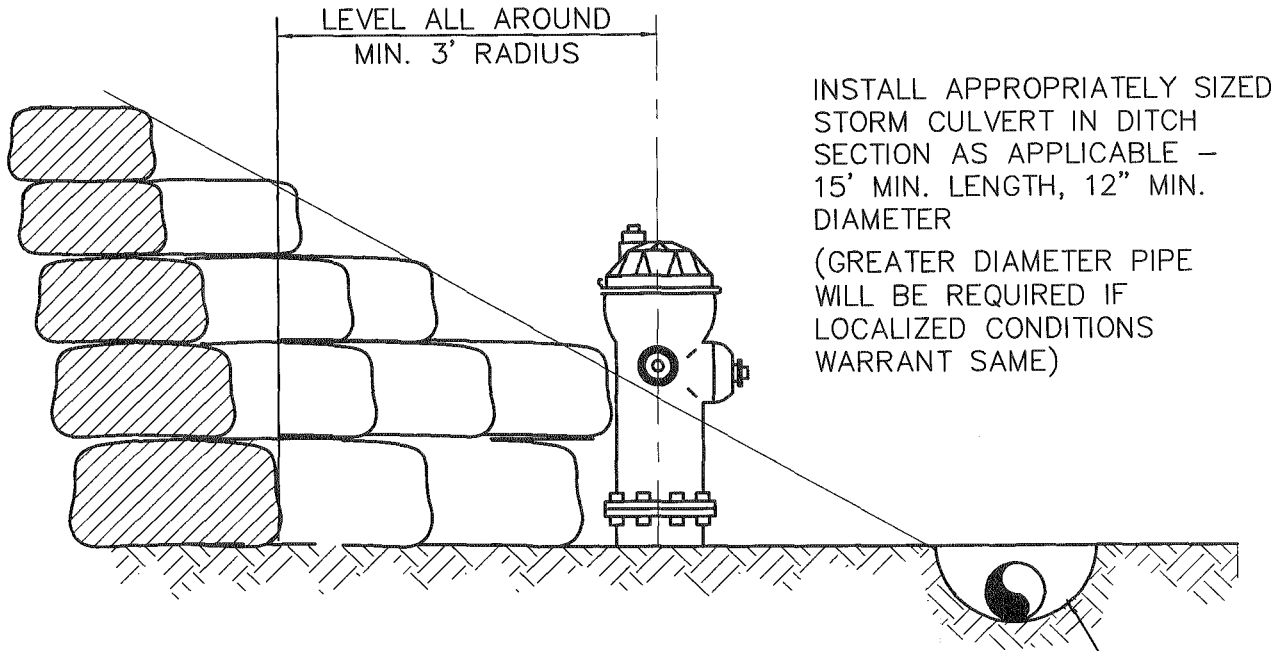

CUT

SEE MASON COUNTY ROAD AND DRAINAGE STANDARDS

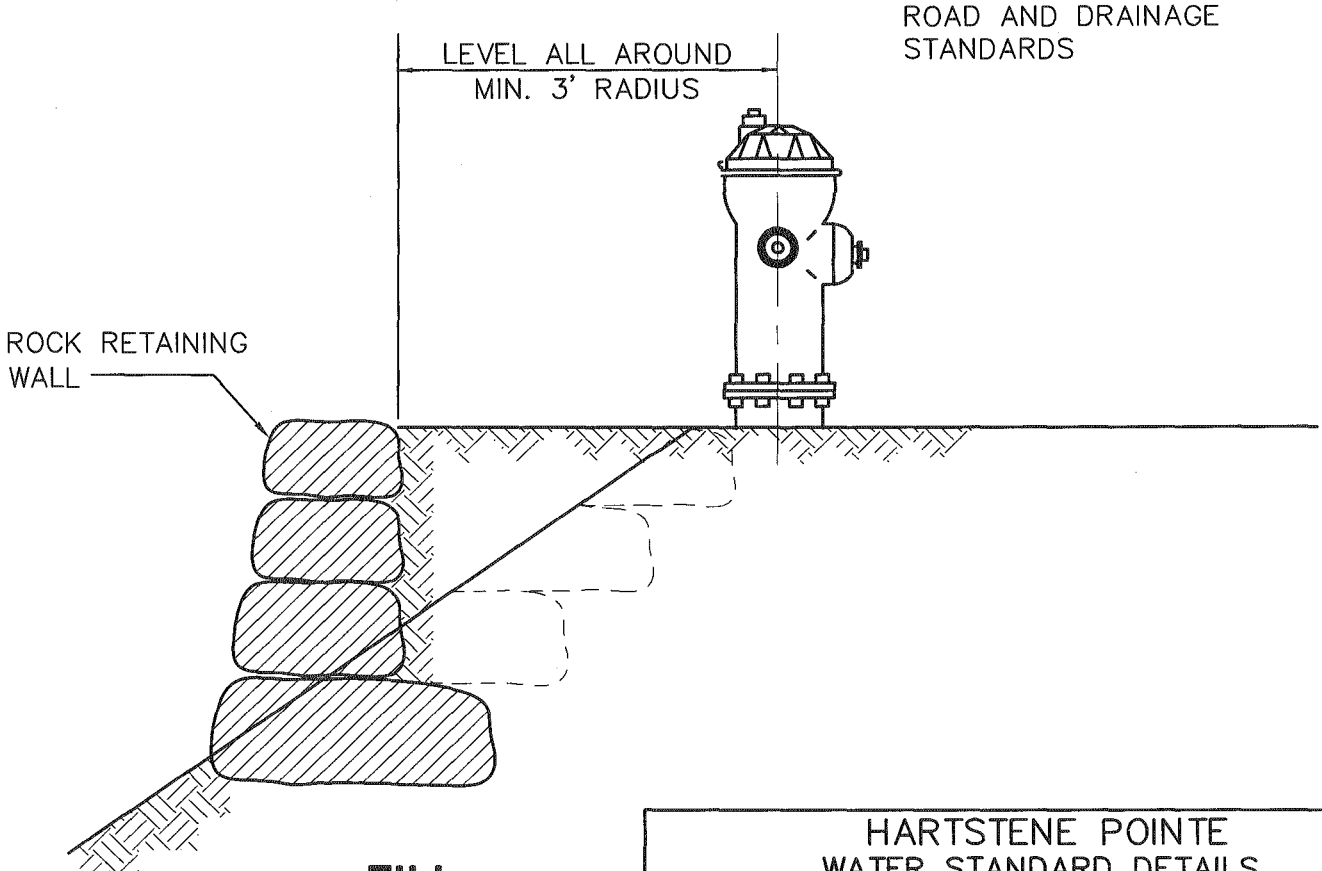

FILL

HARTSTENE POINTE WATER STANDARD DETAILS			
FIRE HYDRANT LOCATION IN CUT OR FILL			
APPROVED: OPERATIONS MANAGER DATE			DWG. NO. 10
DATE: 4/98	DRWN: Q.M.T.	CHKD: T.P.	SCALE: NONE

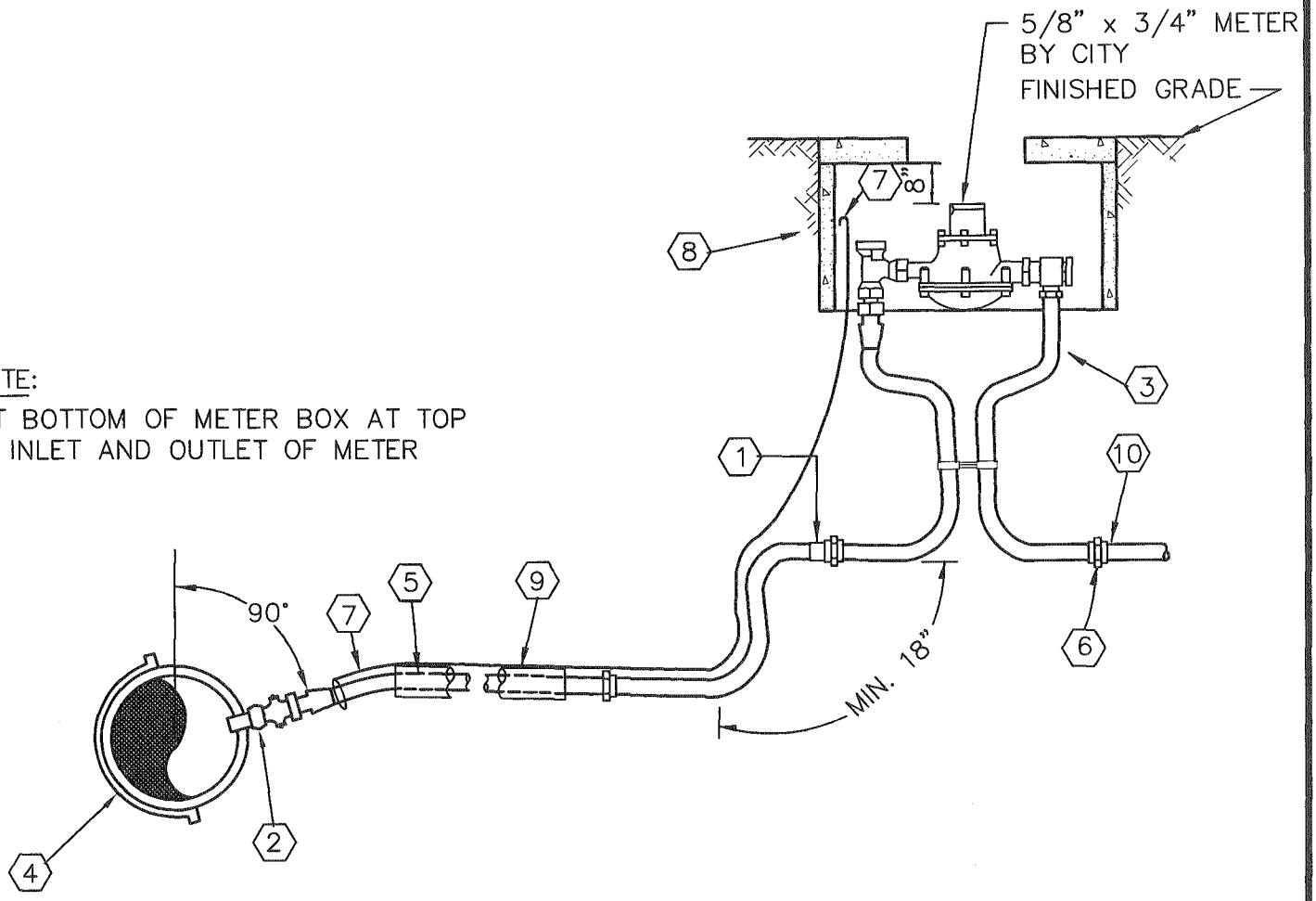

NOTE:
SET BOTTOM OF METER BOX AT TOP OF INLET AND OUTLET OF METER

HARTSTENE POINTE WATER STANDARD DETAILS			
1" AND SMALLER WATER SERVICE			
APPROVED: OPERATIONS MANAGER DATE			DWG. NO. 11
DATE: 4/98	DRWN: Q.M.T.	CHKD: T.P.	SCALE: NONE

WATER SERVICE DETAIL 1" AND SMALLER

LEGEND

1. 1" PI X 3/4" MIP
2. 1" MIP X PEP JOINT CORP STOP EQUAL TO FORD F1101
3. COPPER SETTER EQUAL TO VBH72-12W WITH FORD C86-33
4. ROMAC DOUBLE STRAP SADDLE
5. 1" HIGH MOLECULAR (200 PSI, SDR 7) "POLY" PIPE (LENGTH AS REQUIRED)
6. 3/4" BRASS NIPPLE (LENGTH AS REQUIRED)
7. 14 GAUGE WIRE FROM MAINLINE TAP TO METER BOX AND EXPOSE 6" MINIMUM IN BOX (RUN INSIDE 2" STEEL GUARD CONDUIT WHERE APPLICABLE)
8. METER BOX – FOGTITE NO.1 WITH H20 LOADING (SET FLUSH WITH FINISHED GRADE)
9. INSTALL SERVICE LINE IN 2" STEEL GUARD PIPE (SCH-40) WHEN CROSSING ROADWAY (3' MINIMUM BEYOND AND BENEATH PAVEMENT SECTION)
10. PROVIDE APPROVED WATERTIGHT PLUG UNTIL CONNECTION TO PRIVATE SYSTEM IS MADE.

HARTSTENE POINTE WATER STANDARD DETAILS			
1" AND SMALLER WATER SERVICE			
APPROVED: OPERATIONS MANAGER DATE			DWG. NO. 11
DATE: 4/98	DRWN: Q.M.T.	CHKD: T.P.	SCALE: NONE

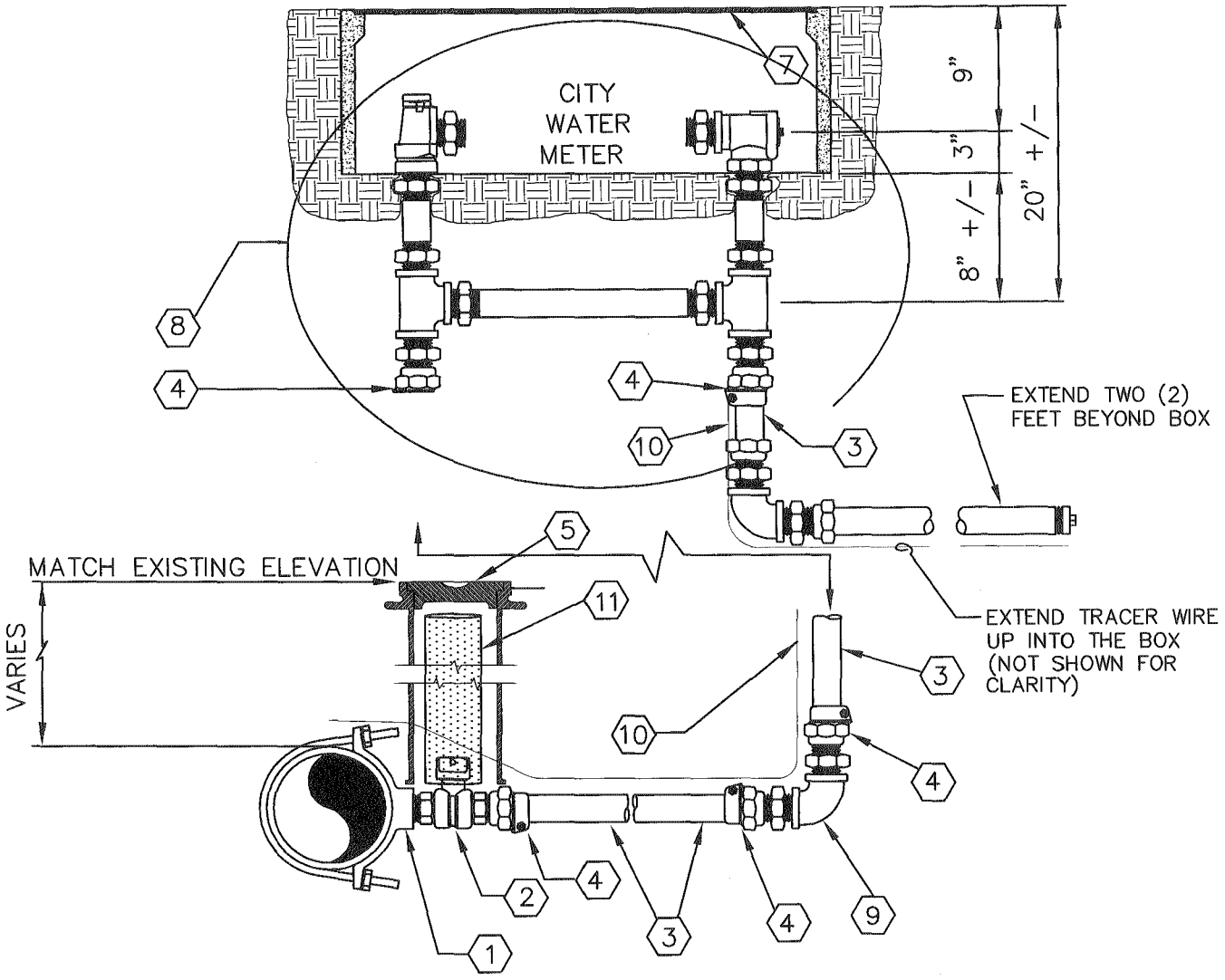

DESCRIPTION	MAKER OR RATING	1-1/2"	2"
1. DOUBLE STRAP SADDLE	ROMAC OR EQUAL	202 IPT	202 IPT
2. GATE OR BALL VALVE W/ 2" OPERATING NUT	FORD OR EQUAL	BALL VALVE	RESILIENT SEAT
3. PIPE – HIGH MOLECULAR POLYETHYLENE PIPE (I.P.S.)	SDR7 (200 PSI)	B11-666 W/QT67	GATE
4. COUPLING MALE	FORD OR EQUAL	C84-66	C84-77
5. VALVE BOX	RICH OR EQUAL		
6. NIPPLE BRASS		1-1/2" X 6"	2" X 6"
7. METER BOX	FOGTITE #2W/H20 LOAD		
8. METER SETTER	FORD OR EQUAL	VFH 66-12 B	VFH 77-12 B
9. BRASS 90° ELBOW		1-1/2"	2"
10. TRACER WIRE	14 GAUGE COPPER WIRE	SOLID	SOLID
11. PVC SLEEVE BENEATH PAVEMENT	PVC-SCH.80 SENSUS TOUCH READ	4" DIA.	4" DIA.

NOTE: TEMPORARILY INSTALL "SPACER" IN METER SETTER UNTIL METER IS INSTALLED

HARTSTENE POINTE
WATER STANDARD DETAILS

1-1/2" & 2" WATER SERVICE

APPROVED:

OPERATIONS MANAGER DATE

DWG. NO. 12

DATE:	DRWN:	CHKD:	SCALE:
4/98	Q.M.T.	T.P.	NONE

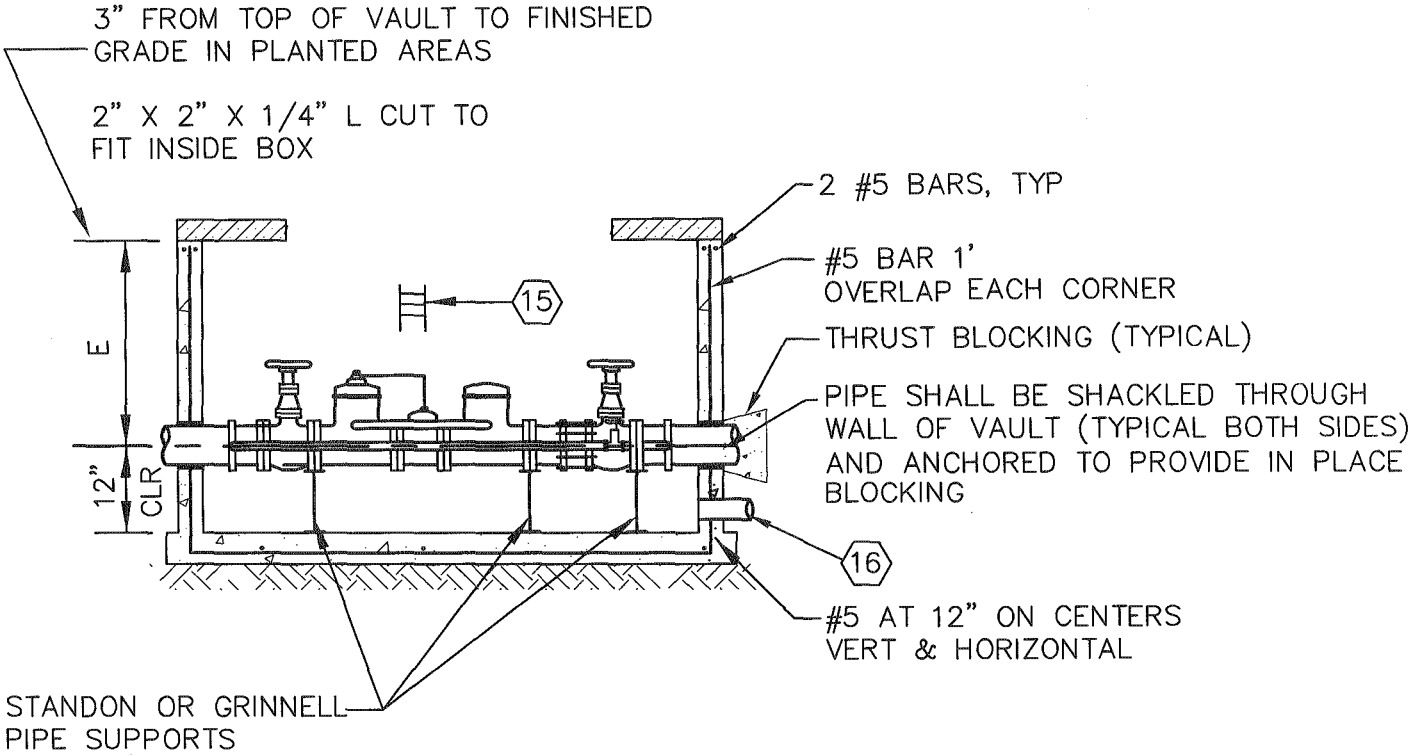

NOTES:

INSTALL 4" DRAIN PIPE TO DAYLIGHT UNLESS OTHERWISE APPROVED. 1% MIN. SLOPE.

BACKFLOW PREVENTOR REQUIRED FOR ALL FIRE LINES AND IRRIGATION LINES, AND SHALL BE IN SEPARATE VAULTS

BRASS DOES NOT NEED TO BE PAINTED, ALL OTHER PIPE SHALL BE PAINTED WITH PARKER PAINT MARINE ENAMEL, MARATHON 1065 TAHOE BLUE.

HARTSTENE POINTE WATER STANDARD DETAILS			
METER AND METER VAULT ASSEMBLY 3" THROUGH 10"			
APPROVED: OPERATIONS MANAGER DATE			DWG. NO. 13
DATE: 4/98	DRWN: Q.M.T.	CHKD: T.P.	SCALE: NONE

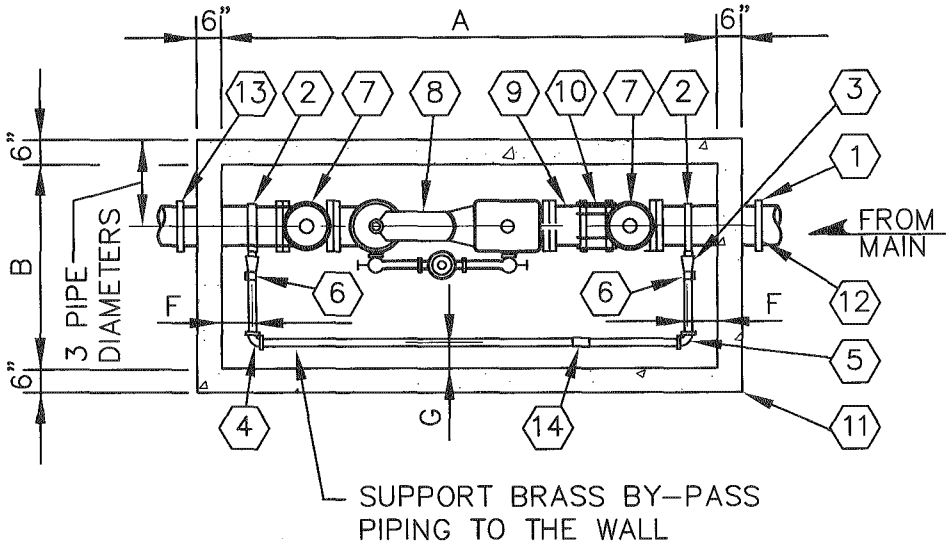

NOTES

1. "SENSUS" METERS (3" TO 10") SHALL BE FURNISHED BY CONTRACTOR AND SIZED BY COMMUNTY. METERS SHALL READ IN CUBIC FEET.
2. VAULT SHALL BE PRECAST, UTILITY VAULT OR COMMUNITY APPROVED EQUAL
3. ALL PIPE & FITTINGS 4" AND LARGER SHALL BE CEMENT LINED.
4. PIPING FROM MAIN TO VAULT SHALL BE AS SHOWN IN TABLE BELOW. PROVIDE TEE WITH VALVE ON DISTRIBUTION MAIN.
5. ALL PIPING SHALL BE PAINTED (TWO COATS) WITH PARKER PAINT MARINE ENAMEL, MARATHON 1065, TAHOE BLUE.

METER SIZE	MAIN-LINE	BYPASS	A	B	C	D	E	F	G
3"	4" DI.	1 1/2" BRASS	7'-6"	3'-0"	9 1/2"	6"	2'-8"	9"	4"
4"	4" DI.	1 1/2" BRASS	7'-6"	3'-0"	9 1/2"	6"	2'-8"	9"	4"
6"	6" DI.	2" BRASS	9'-6"	3'-6"	12"	6"	2'-8"	9"	4"
8"	8" DI.	4" DI.	11'-0"	4'-0"	12"	9"	3'-6"	14"	6"
10"	10" DI.	4" DI.	13'-0"	5'-0"	16"	12"	4'-0"	16"	6"

HARTSTENE POINTE
WATER STANDARD DETAILS

METER AND METER VAULT ASSEMBLY 3" THROUGH 10"

APPROVED:

OPERATIONS MANAGER DATE

DWG. NO. 13

DATE:	DRWN:	CHKD:	SCALE:
4/98	Q.M.T.	T.P.	NONE

MATERIAL LIST

1. 2–FLEX CPLG TO FIT ROCKWELL 441 4" X 3" REDUCER, M.J. FOR 3" METER
2. 2–DOUBLE STRAP SERVICE CLAMPS, ROMAC 101 WITH IPS TAP, OR EQUAL
3. 3–STRAIGHT CPLG. BRASS TO OUTSIDE I.P. THREAD MUELLER H–15425,H–15428 110 COMP., OR EQUAL
4. 1 1/4" BEND CPLG BRASS TO BRASS MUELLER H–15525.
5. 1 1/4" BEND CPLG, BRASS TO OUTSIDE I.P. THREAD MUELLER H–15530, OR EQUAL.
6. 1 BALL VALVE WITH PADLOCK WING OR LOCK CAP, FORD B21–444W OR B21–666 WITH LOCK CAP OR B21–777 WITH LOCK CAP.
7. 2–RESILIENT SEAT GATE VALVE, FL X FL, (RISING STEM)
8. 1–3" TO 10" COMPOUND METER – SIZE TO BE AS SPECIFIED BY COMMUNITY AND FURNISHED BY CONTRACTOR/DEVELOPER
9. 1 C.I. ADPT. FL X PE (LENGTH TO FIT)
10. 1–CPLG. ADAPT., FL ROCKWELL 912, OR COMMUNITY APPROVED EQUAL
11. CAST IN PLACE OR PRECAST CONCRETE VAULT WITH (H20) BILCO HATCH (SIZE AND LOCATION TO BE APPROVED BY COMMUNITY)
12. WELDED FL RESTRAINT OR SHACKLE TO THRUST BLOCK TO PREVENT MOVEMENT IF METER IS REMOVED
13. INSULATED CPLG. TO 3" CU SERVICE.
14. UNION
15. INSTALL ALUMINUM LADDER WITH TELESCOPIC RISER FASTEN TO WALL WITH STAINLESS STEEL FASTENER AT MAXIMUM THREE FOOT INTERVALS.
16. PROVIDE 4" DRAIN PIPE (AT PUMP) TO DAYLIGHT MIN. SLOPE = 2%

HARTSTENE POINTE WATER STANDARD DETAILS			
METER AND METER VAULT ASSEMBLY 3" THROUGH 10"			
APPROVED: OPERATIONS MANAGER DATE			DWG. NO. 13
DATE: 4/98	DRWN: Q.M.T.	CHKD: T.P.	SCALE: NONE

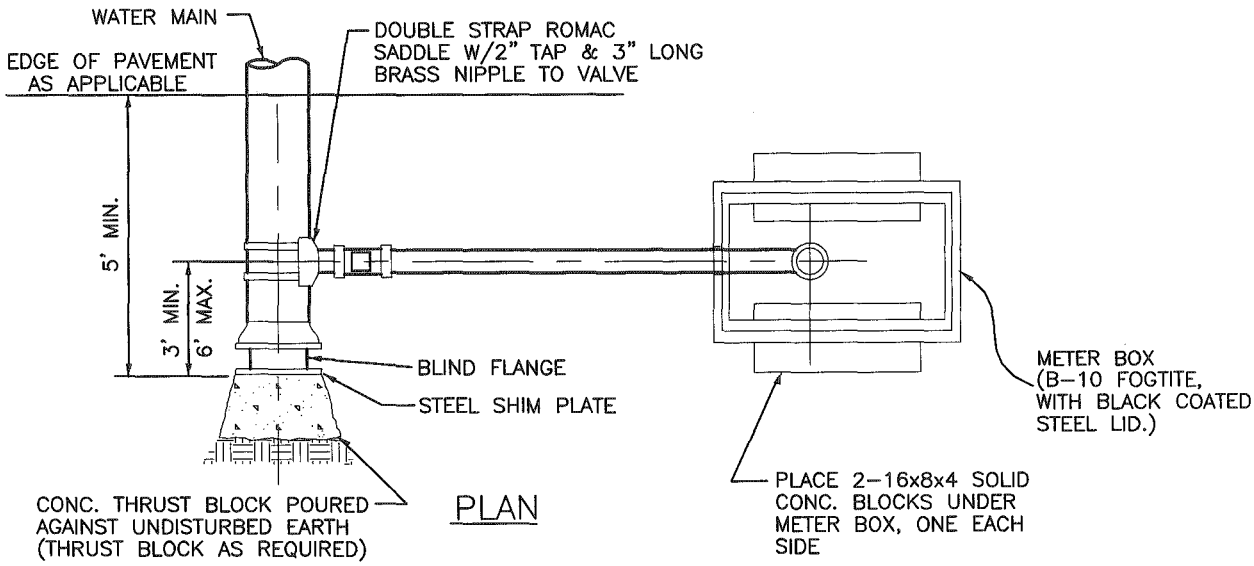

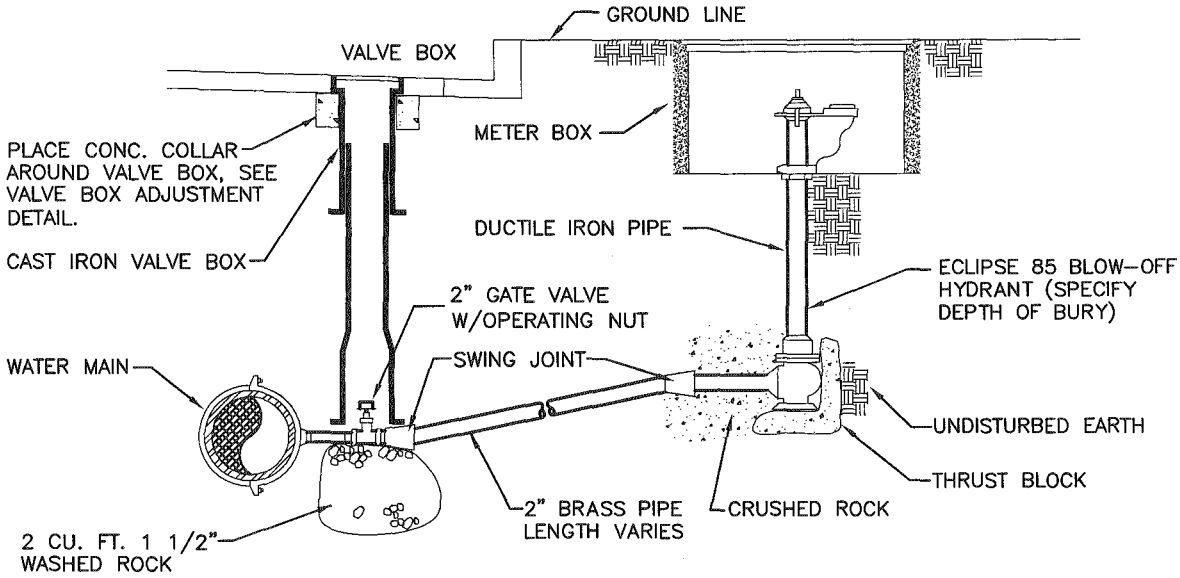

ELEVATION

BLOW-OFF HYDRANTS SHALL BE NON-FREEZING, SELF-DRAINING TYPE.

1. SET UNDERGROUND IN COMMUNITY APPROVED METER BOX, THESE HYDRANTS SHALL BE FURNISHED WITH A 2" FIP INLET, A NON-TURNING OPERATING ROD, AND SHALL OPEN TO THE DESIGN, AND BE SERVICEABLE FROM ABOVE GRADE WITH NO DIGGING.
2. THE OUTLET SHALL BE BRONZE AND BE 2-1/2" NST.
3. HYDRANTS SHALL BE LOCKABLE TO PREVENT UNAUTHORIZED USE.

(SPECIFY OVERALL LENGTH 6" SHORTER THAN NORMAL DEPTH OF BURY. MINIMUM OPENING IN METER BOX SHALL BE 10".)

HARTSTENE POINTE WATER STANDARD DETAILS			
2" BLOW-OFF ASSEMBLY			
APPROVED: OPERATIONS MANAGER DATE			DWG. NO. 14
DATE: 4/98	DRWN: Q.M.T.	CHKD: T.P.	SCALE: NONE

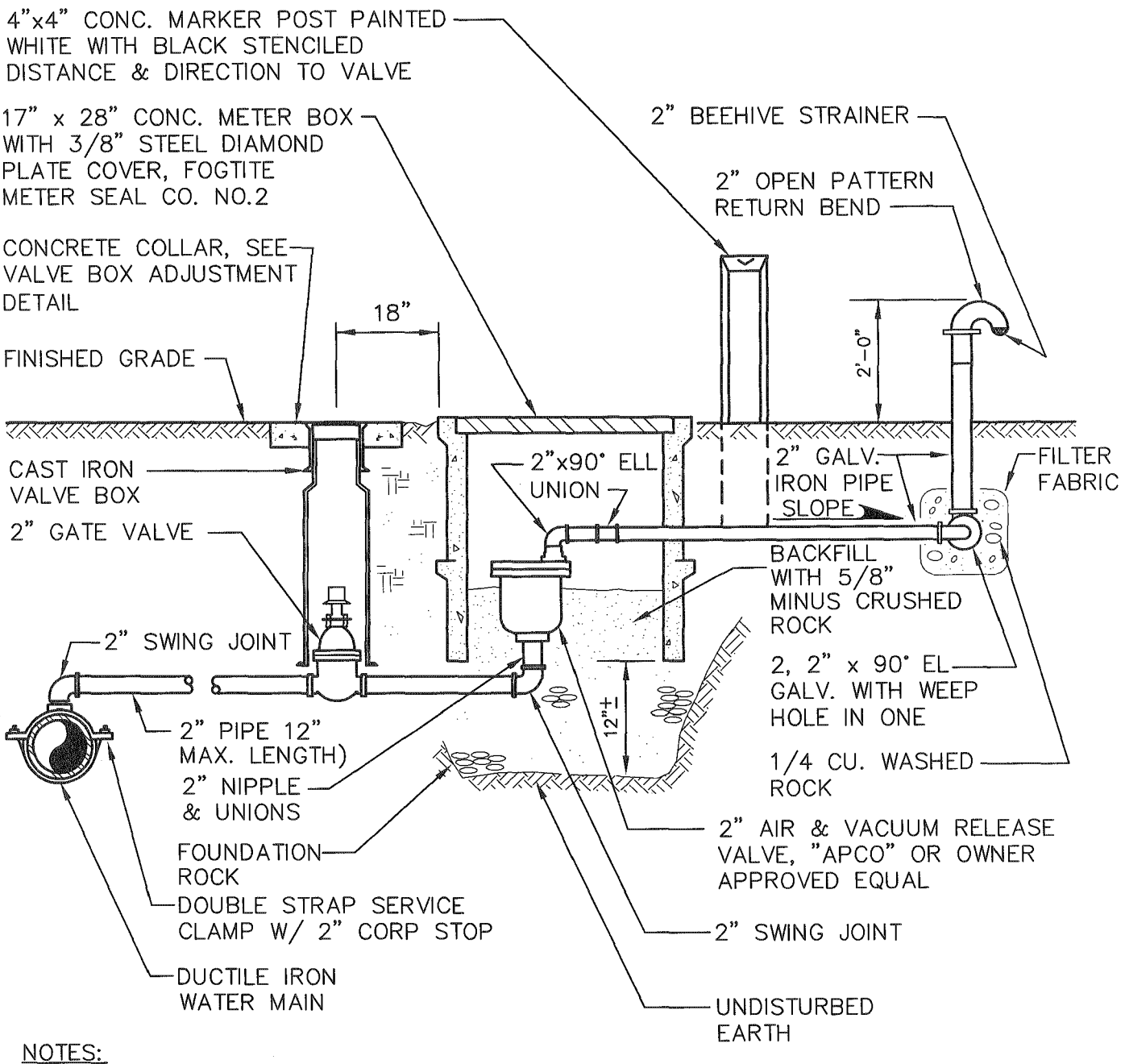

NOTES:

1. GATE VALVE: AWWA RESILIENT SEAL, THRD x THRD WITH OPERATING NUT
2. ALL PIPING BETWEEN DOUBLE STRAP SADDLE AND INLET SIDE OF COMBINATION AIR & VAC ASSEMBLY SHALL BE BRASS
3. TAP MAIN AT SYSTEM HIGH POINT. LOCATION TO BE APPROVED BY THE COMMUNITY

HARTSTENE POINTE WATER STANDARD DETAILS			
AIR & VACUUM RELEASE ASSEMBLY			
APPROVED: OPERATIONS MANAGER DATE			DWG. NO. 15
DATE: 4/98	DRWN: Q.M.T.	CHKD: T.P.	SCALE: NONE

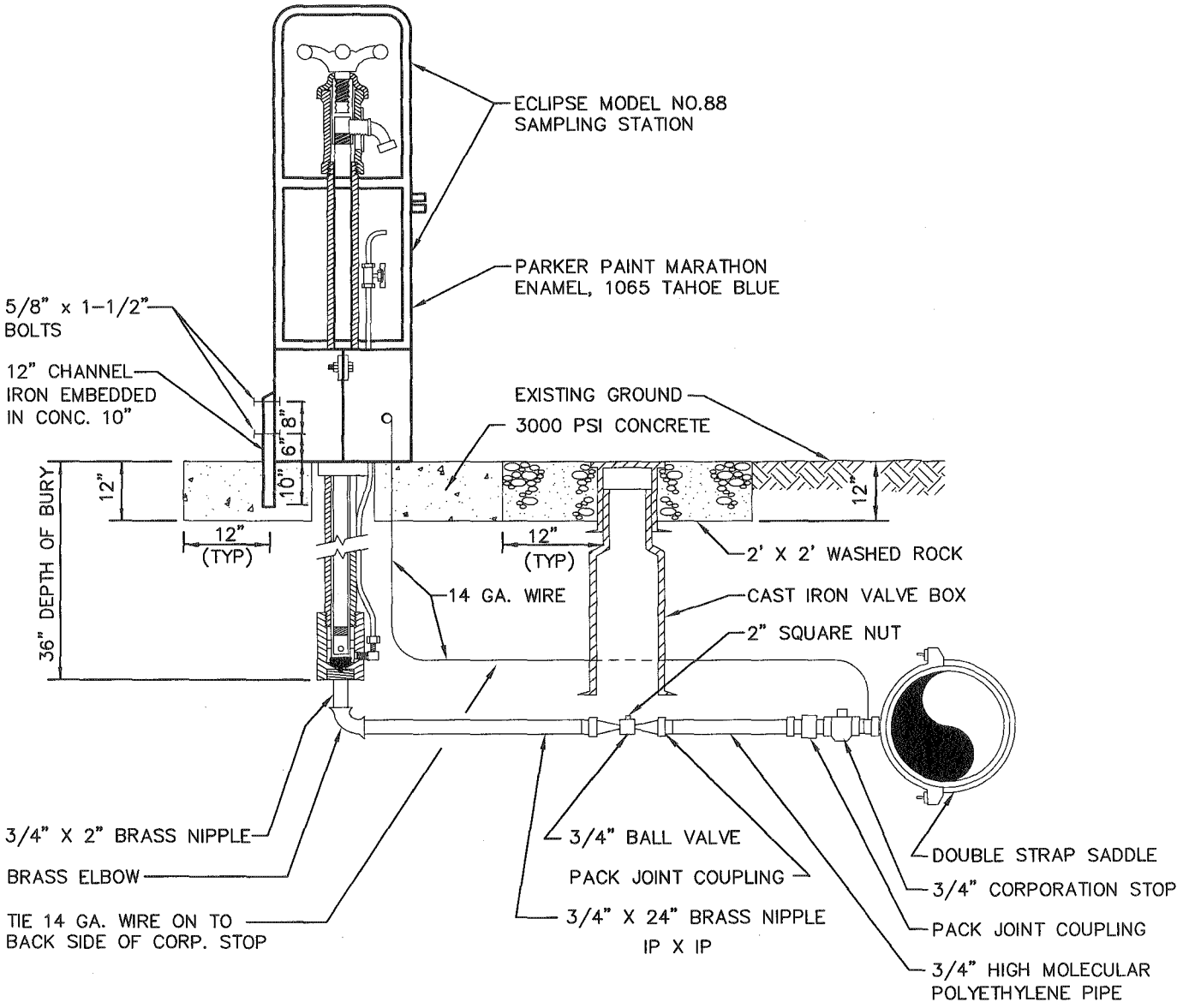

HARTSTENE POINTE WATER STANDARD DETAILS			
WATER SAMPLING STATION			
APPROVED: OPERATIONS MANAGER DATE			DWG. NO. 16
DATE: 4/98	DRWN: Q.M.T.	CHKD: T.P.	SCALE: NONE

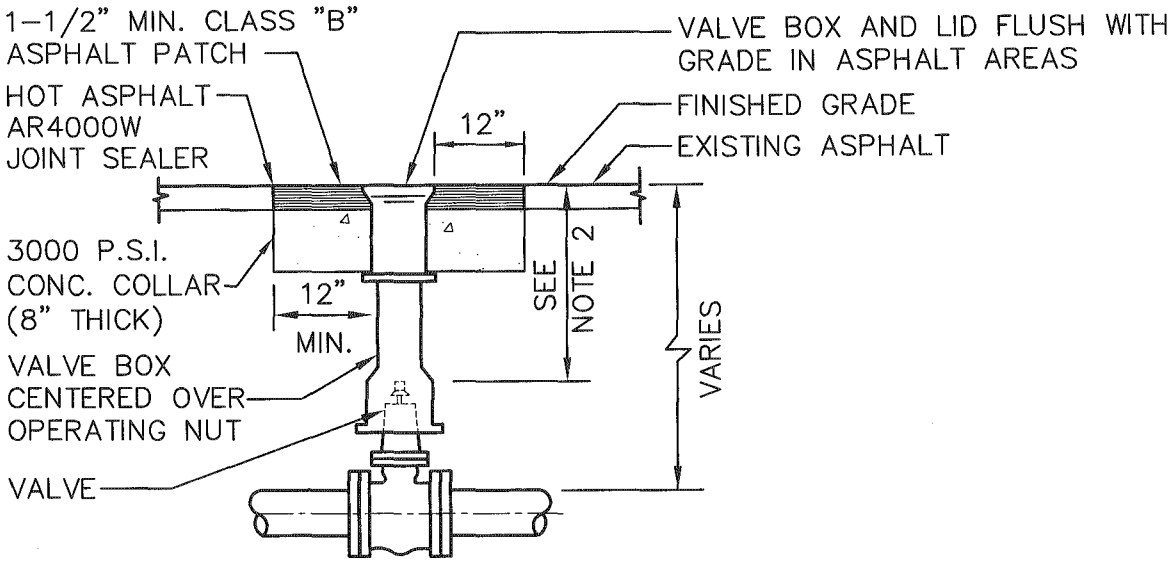

VALVE BOX IN ASPHALT AREA

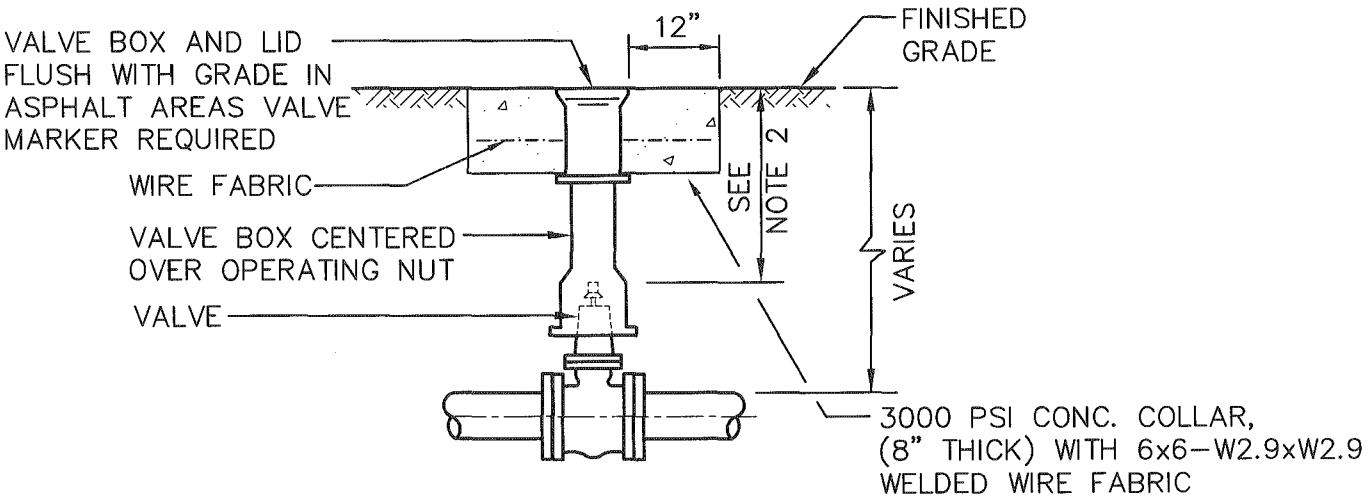

VALVE BOX IN UNIMPROVED AREA

NOTES:

1. EACH VALVE SHALL BE PROVIDED WITH AND ADJUSTABLE CAST IRON VALVE BOX OF 5 INCHES (5") INSIDE DIAMETER. VALVE BOXES SHALL HAVE A TOP SECTION WITH AN EIGHTEEN INCH (18") MIN. LENGTH. THE VALVE BOX SHALL BE RICH No. 940 OR APPROVED EQUAL. VALVE BOX EARS SHALL BE PLACED IN LINE WITH PIPE IT SERVES.

2. 15" MINIMUM, 36" MAXIMUM FOR OPERATOR NUT. EXTENSION MAY BE REQUIRED.

HARTSTENE POINTE WATER STANDARD DETAILS			
VALVE BOX ADJUSTMENT			
APPROVED: OPERATIONS MANAGER DATE			DWG. NO. 17
DATE: 4/98	DRWN: Q.M.T.	CHKD: T.P.	SCALE: NONE

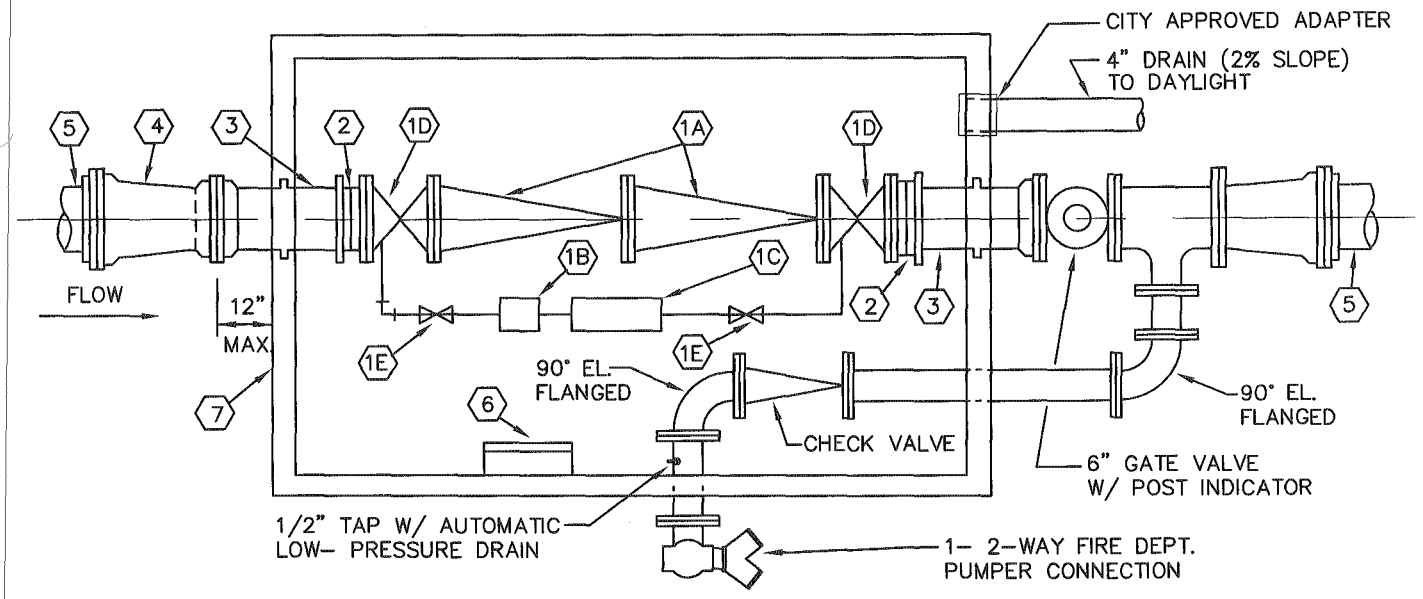

LEGEND

(1) DOUBLE-CHECK DETECTOR VALVE ASSEMBLY CAPABLE OF METERING WATER USAGE UNDER LOW FLOW CONDITIONS. 10.0 PSI HEAD LOSS AT 1600 GPM FOR 8" SIZE. ASSEMBLY SHALL BE DOH APPROVED. SIZE AS APPROVED BY DISTRICT.

- 1A. 2 - CHECK VALVES, (FL)
- 1B. 1 - BY-PASS METER 5/8" X 3/4" SENSUS (C.F. READING) METER COMPLETE WITH SPUD NUT.
- 1C. 1 - DOUBLE CHECK VALVE ASSEMBLY, (DOH APPROVED.) 3/4" FOR 8" D.D.C.V.
- 1D. 2 - GATE VALVES, (FL) W/HAND WHEEL; RISING STEM, RESILIENT SEATED AS PER DISTRICT REQUIREMENTS.
- 1E. 2 - GATE VALVES, (FL) W/ HAND WHEEL; RISING STEM, RESILIENT SEATED AS PER DISTRICT REQUIREMENTS.

(2) 2 - FLANGED COUPLING ADAPTER, SIZE AS SPECIFIED ON PLANS. (LOCATE MINIMUM 6" FROM INNER WALL)

(3) 2 - PIPE SPOOLS, PLAIN END.

(4) 1- REDUCER (MJ X MJ), IF REQUIRED.

(5) RESTRAINED JOINT WATER MAIN CL50.

(6) ALUMINUM (TELESCOPING) LADDER, USE STAINLESS STEEL FASTENERS AT 3' MAX. SPACING

(7) UTILITY VAULT CO. VAULTS SHALL BE CITY STD. OF QUALITY; SUBMIT ALTERNATIVES FOR APPROVAL. HINGED AND SPRING LOCKED STEEL DIAMOND P/L COVER 2-332P, (DOUBLE HATCH COVER.) 4" C.I. FLOOR DRAIN INTO 4" PVC DRAIN LINE. DAYLIGHT OR STORM SYSTEM. (NO SUMP PUMPS) CHECK VAULT SIZE REQUIRED FOR ENCLOSING COMPLETE ASSEMBLIES.

(8) PROVIDE GRINNELL PIPE SUPPORTS, TO INCLUDE STEEL YOKE, BOLT TO VAULT FLOOR USING RECOMMENDED CONNECTION AND SIZES.

MIN. VAULT SIZES:

4"	5106 LA	--	5'-0" X 10'-6" X 6'-3" HIGH
6"	5106 LA	--	5'-0" X 10'-6" X 6'-3" HIGH
8"	612 LA	--	6'-0" X 12'-0" X 6'-6 1/2" HIGH
10"	612 LA	--	6'-0" X 12'-0" X 6'-6 1/2" HIGH

NOTE:

1. PAINT ALL PIPING WITH PARKER PAINT MARINE ENAMEL, MARATHON 1065 TAHOE BLUE
2. PROVIDE GRINNELL PIPE SUPPORTS, WHERE REQUIRED. (3 MINIMUM) BY DISTRICT.

HARTSTENE POINTE WATER STANDARD DETAILS			
DOUBLE-CHECK DETECTOR WITH FIRE CONNECTION			
APPROVED: OPERATIONS MANAGER DATE			DWG. NO. 18
DATE: 4/98	DRWN: Q.M.T.	CHKD: T.P.	SCALE: NONE

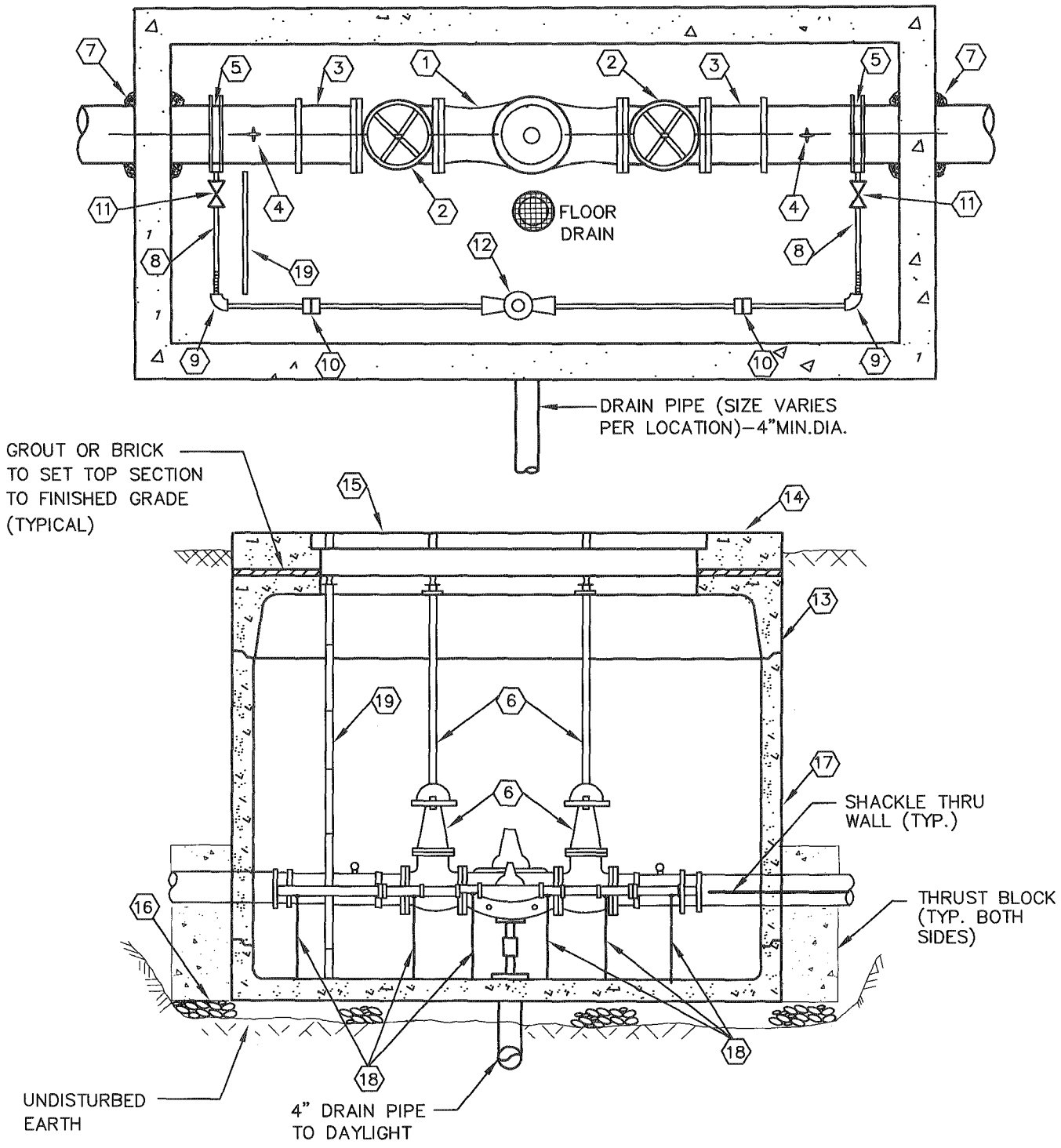

HARTSTENE POINTE WATER STANDARD DETAILS			
PRESSURE REDUCING STATION			
APPROVED: OPERATIONS MANAGER DATE			DWG. NO. 19
DATE:	DRWN: Q.M.T.	CHKD: T.P.	SCALE: NONE

PRESSURE REDUCING STATION

(TO BE SIZED BY DISTRICT)

LEGEND

1. PRESSURE REDUCING PRESSURE SUSTAINING VALVE (FL X FL), CLA-VAL WITH VALVE SUPPORT AND INDICATOR GAUGE.
2. NRS RESILIENT SEAT FLANGED GATE VALVE WITH HANDWHEEL, AND VALVE SUPPORT ASSEMBLY.
3. (FL X MJ) ADAPTER COUPLING.
4. PRESSURE GAUGE 0-200 PSI WITH RAY PRESSURE SNUBBER AND SHUT OFF COCK
5. 2" DIAMETER DOUBLE STRAP TAPPED SADDLE.
6. VALVE EXTENSION STEM AND GUIDE FURNISH WITH FORK TO FIT HANDWHEEL AND 2" OPENING NUT AND BRACKET TO HATCH SIDE OPENING. SHOW DETAIL.
7. WATERTIGHT GROUT FOR INLET PIPE.
8. 2" DIAMETER BRASS (THD X THD) WITH PIPE SUPPORT.
9. 2" 90° BRASS ELBOW (THD X THD) WITH PIPE SUPPORT.
10. 2" UNION.
11. 2" RESILIENT SEAT GATE VALVE (THD X THD) WITH PIPE SUPPORT.
12. 2" PRV, CLA-VAL NO. 90G-01AS WITH VALVE SUPPORT.
13. UTILITY VAULT, TOP SECTION TO BE SPECIFIED AND APPROVED BY THE COUNTY
14. UTILITY VAULT, ADJUSTABLE COVER TO BE SPECIFIED AND APPROVED BY THE COUNTY.
15. BILCO HATCH CO., ALUMINUM ACCESS DOORS SUITABLE FOR H-20 LOADING (WATERTIGHT)
16. 8" MINIMUM COMPACTED THICKNESS OF FOUNDATION ROCK
17. UTILITY VAULT, SIZE TO BE SPECIFIED BY THE COUNTY.
18. GRINNELL PIPE SUPPORTS, TO INCLUDE STEEL YOKE, BOLT TO VAULT FLOOR USING RECOMMENDED CONNECTION AND SIZES.
19. TELESCOPIC ALUMINUM LADDER, BOLT (STAINLESS STEEL) AT FLOOR AND HATCH OPENING.

NOTE:

1. ALL 2" PIPE SHALL BE BRASS
2. PAINT ALL PIPING WITH PARKER PAINT, MARINE ENAMEL MARATHON 1065 TAHOE BLUE

HARTSTENE POINTE WATER STANDARD DETAILS			
PRESSURE REDUCING STATION			
APPROVED: OPERATIONS MANAGER DATE			DWG. NO. 19
DATE: 4/98	DRWN: Q.M.T.	CHKD: T.P.	SCALE: NONE

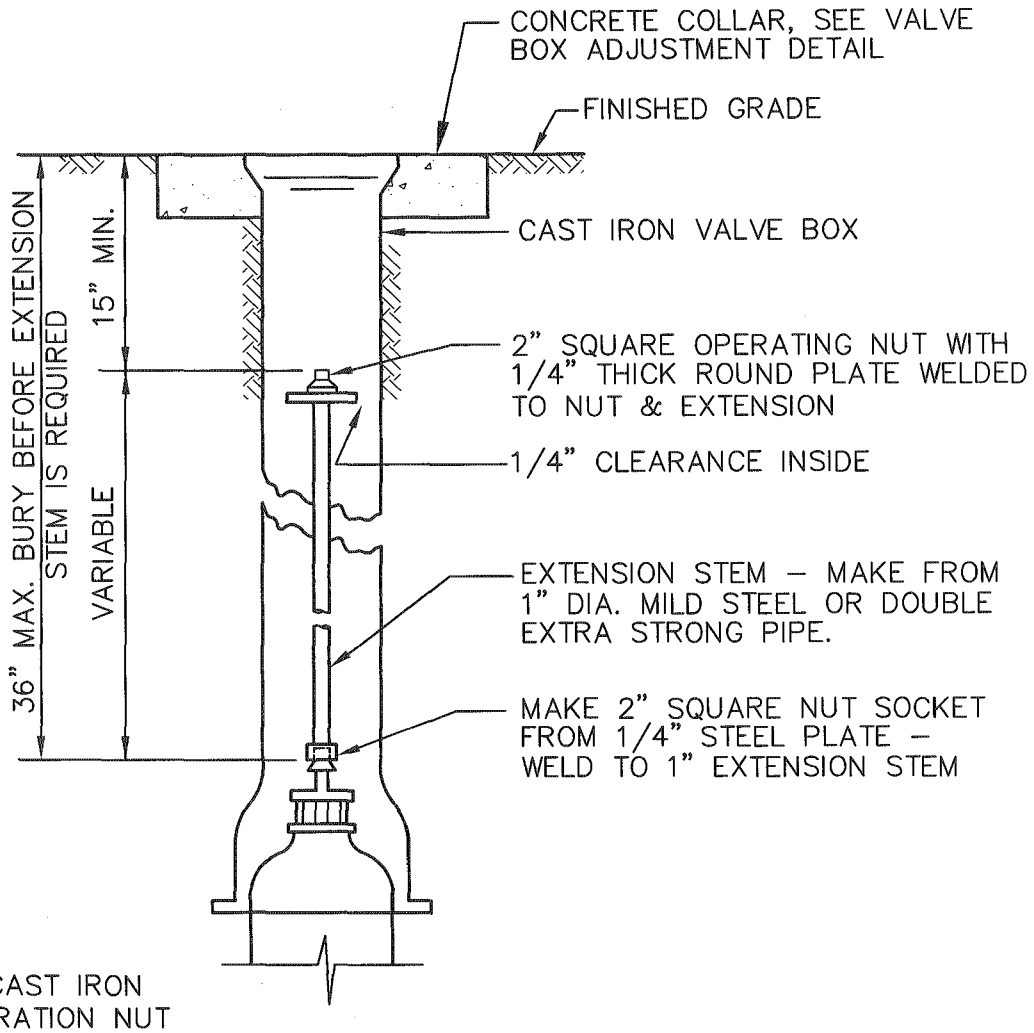

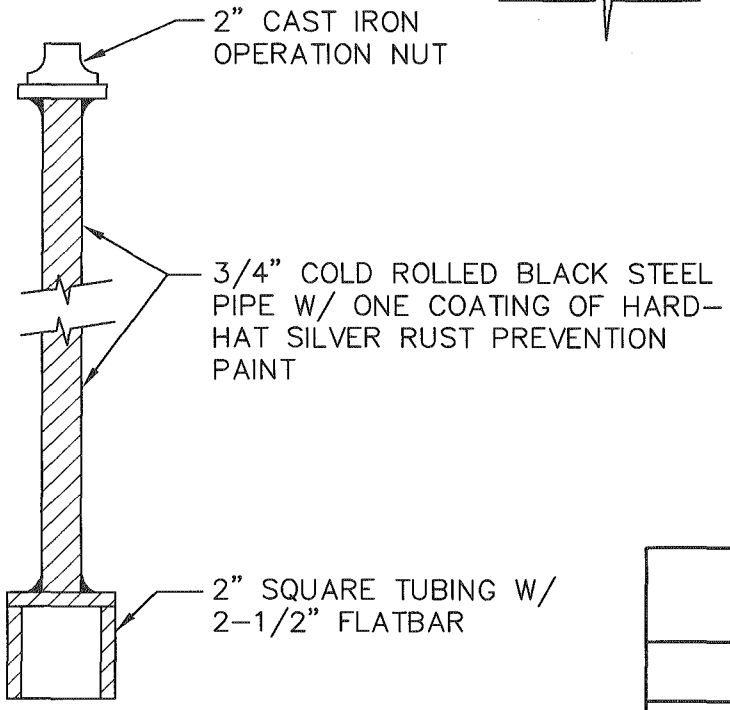

HARTSTENE POINTE WATER STANDARD DETAILS			
WATER VALVE STEM EXTENSION			
APPROVED: OPERATIONS MANAGER DATE			DWG. NO. 20
DATE: 4/98	DRWN: Q.M.T.	CHKD: T.P.	SCALE: NONE

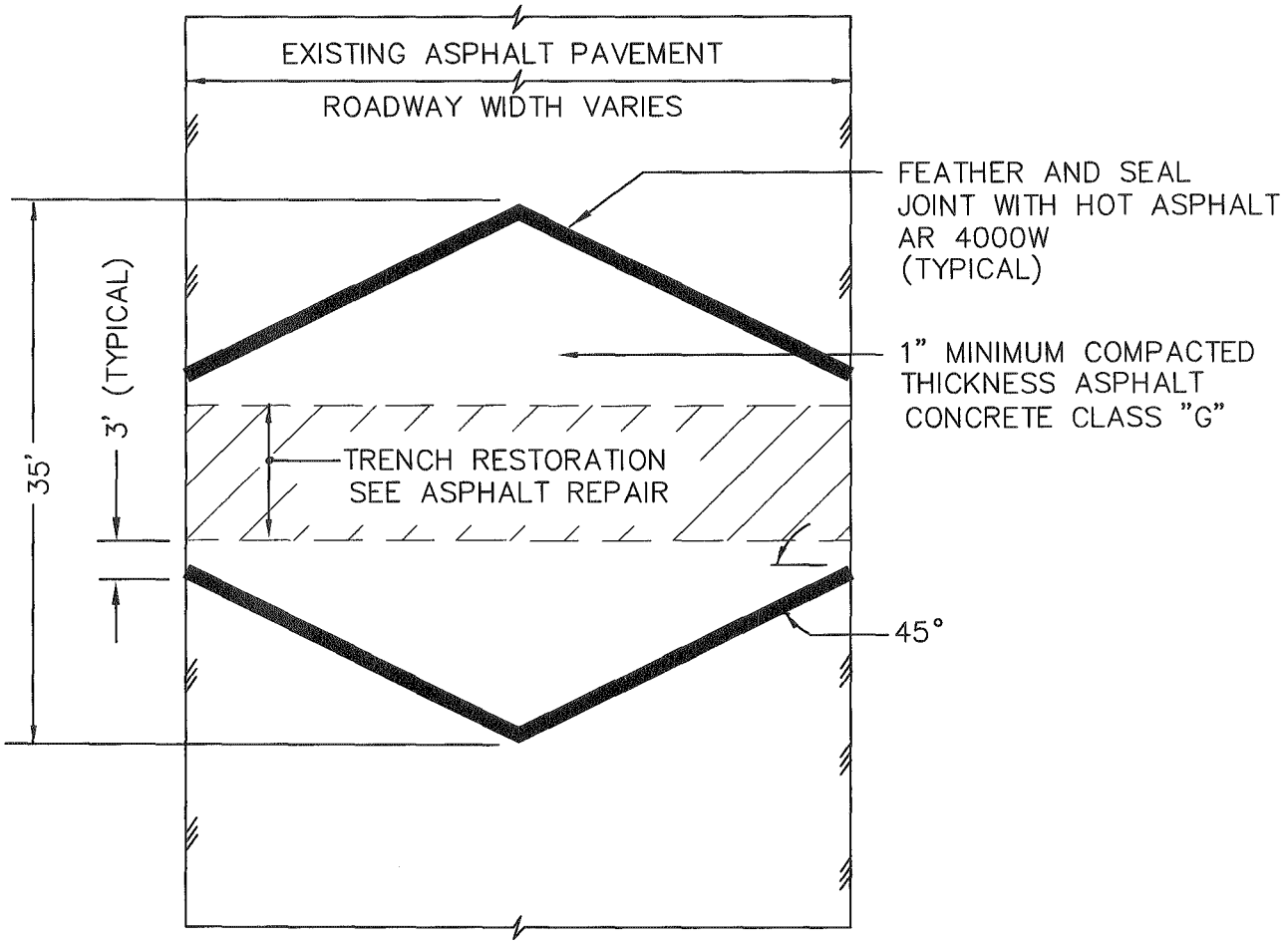

HARTSTENE POINTE WATER STANDARD DETAILS			
ASPHALT DIAMOND PATCH			
APPROVED: OPERATIONS MANAGER DATE			DWG. NO. 21
DATE: 4/98	DRWN: Q.M.T.	CHKD: T.P.	SCALE: NONE

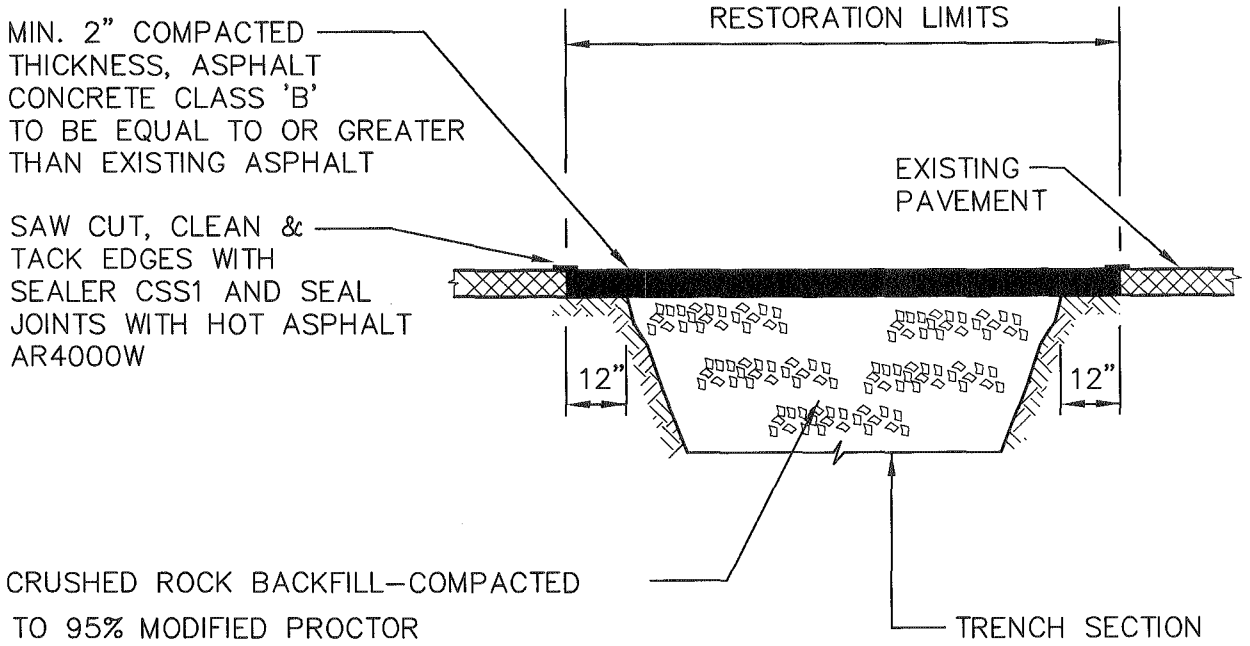

NOTES:

1. LEWIS COUNTY PUBLIC WORKS R.O.W CONSTRUCTION PERMITS MAY REQUIRE ALTERNATE RESTORATION
2. 100% CRUSHED ROCK BACKFILL REQUIRED ON ALL ROADWAY CUTS

HARTSTENE POINTE WATER STANDARD DETAILS			
ASPHALT PAVEMENT REPAIR			
APPROVED: OPERATIONS MANAGER DATE			DWG. NO. 22
DATE: 4/98	DRWN: Q.M.T.	CHKD: T.P.	SCALE: NONE

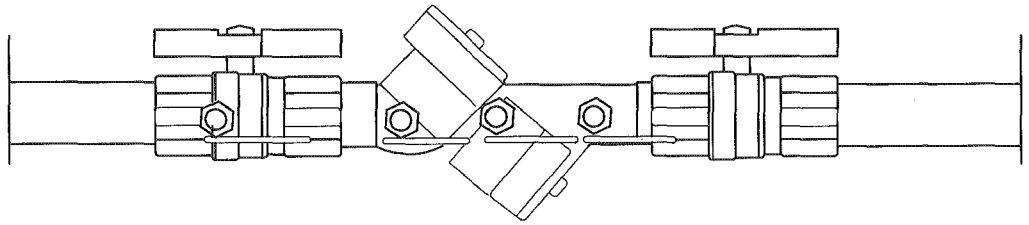

PLAN VIEW

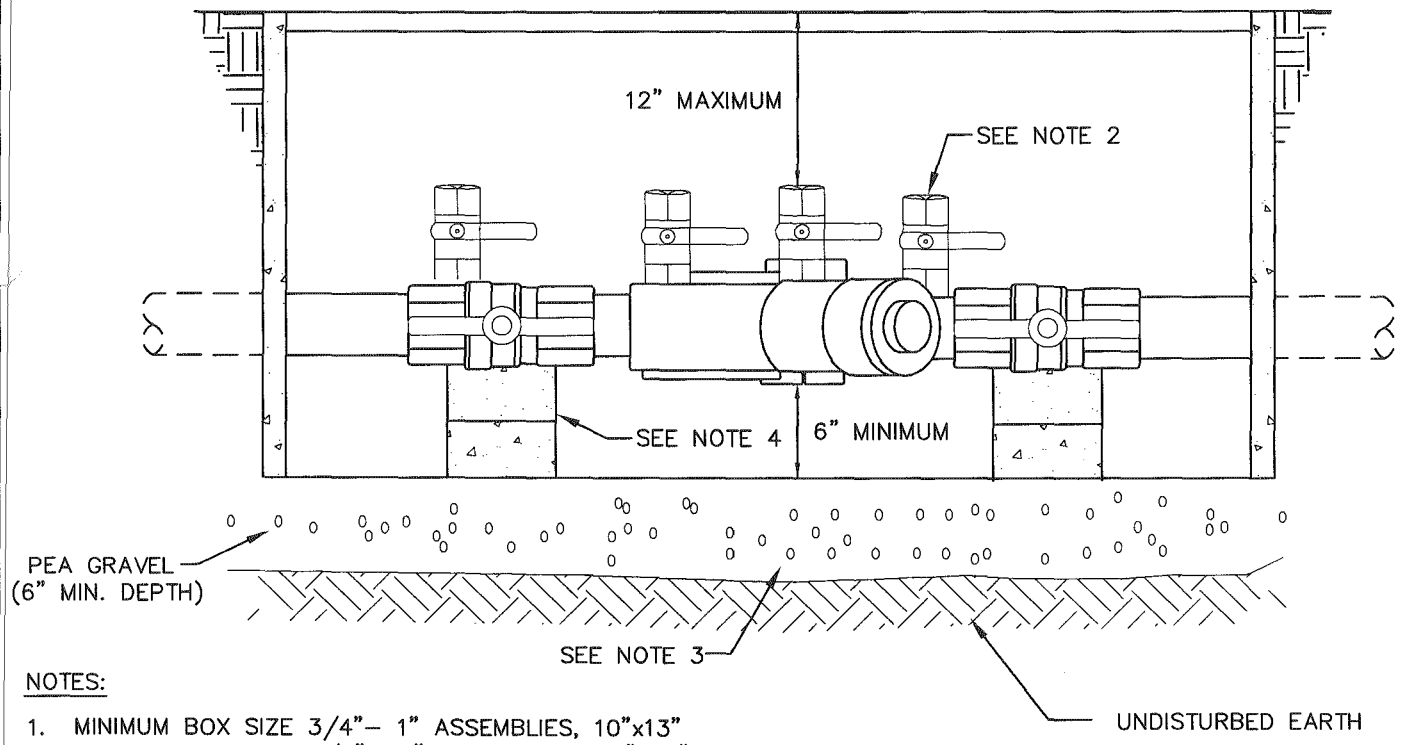

NOTES:

1. MINIMUM BOX SIZE 3/4"– 1" ASSEMBLIES, 10"x13"
   1 1/4"– 2" ASSEMBLIES, 14"x20"
2. ASSEMBLY MUST BE INSTALLED WITH TEST COCKS FACING UP OR TO ONE SIDE. INSTALL WATERTIGHT PLUGS IN ALL TEST COCKS.
3. SUFFICIENT DRAINAGE MUST BE PROVIDED TO PREVENT ASSEMBLY FROM BEING SUBMERGED.
4. PROVIDE SUPPORT BLOCKS AS MAY BE REQUIRED.
5. PROVIDE A STRAINER WITH BLOW OUT TAPPING AHEAD OF DEVICE IF REQUIRED BY CITY
6. THOROUGHLY FLUSH THE LINE, PRIOR TO THE INSTALLATION OF THE D.C.D.A.
7. PROTECT DEVICE FROM FREEZING BY INSTALLING IN STRUCTURE OR PER "HOT BOX" SHOWN IN REDUCED PRESSURE BACKFLOW DEVICE DETAIL.

HARTSTENE POINTE WATER STANDARD DETAILS			
"INDIVIDUAL" DOUBLE CHECK DETECTOR ASSEMBLY			
APPROVED: OPERATIONS MANAGER DATE			DWG. NO. 23
DATE: 4/98	DRWN: Q.M.T.	CHKD: T.P.	SCALE: NONE

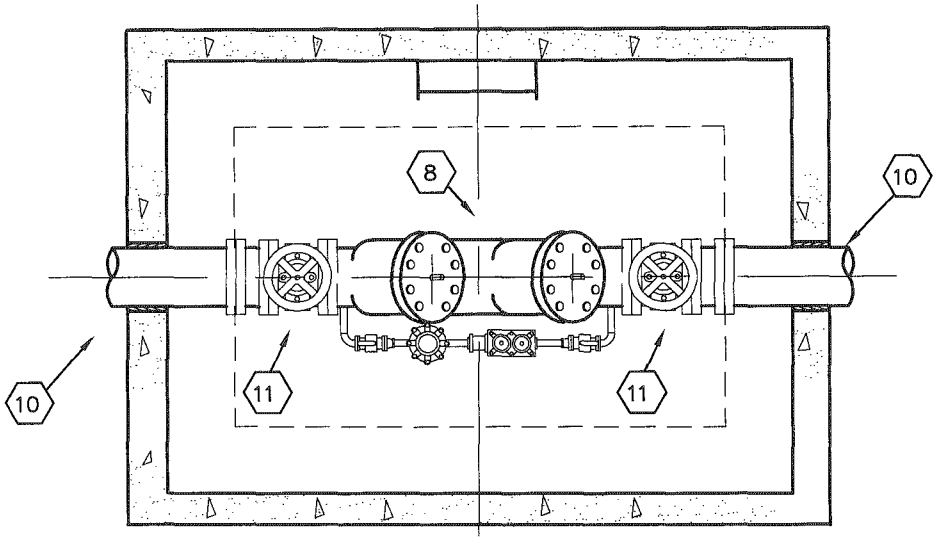

PLAN

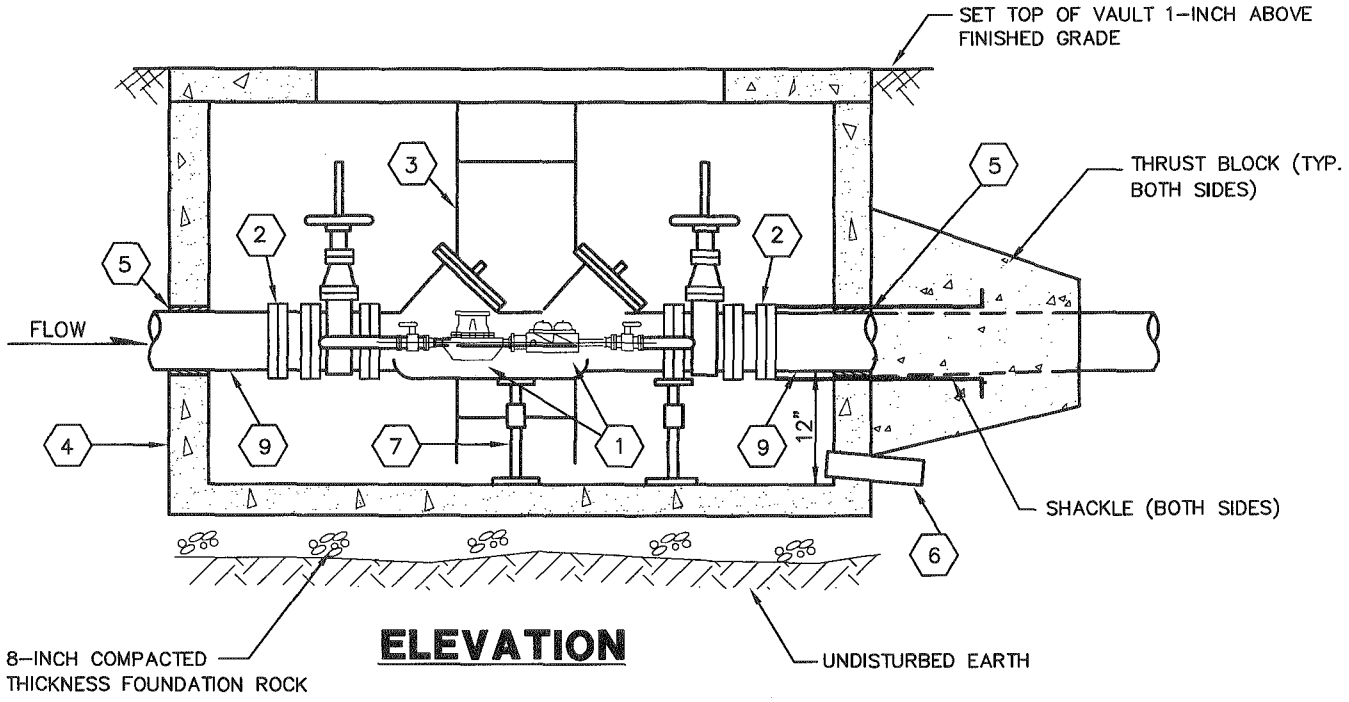

ELEVATION

HARTSTENE POINTE WATER STANDARD DETAILS			
DETECTOR DOUBLE-CHECK VALVE ASSEMBLY			
APPROVED: OPERATIONS MANAGER DATE			DWG. NO. 24
DATE: 4/98	DRWN: Q.M.T.	CHKD: T.P.	SCALE: NONE

1. DETECTOR DOUBLE CHECK VALVE ASSEMBLY MODEL TO BE PRE APPROVED BY THE CITY.
2. UNI-FLANGE WITH SET SCREWS
3. TELESCOPIC ALUMINUM LADDER TO BE SECURED TO VAULT WITH STAINLESS STEEL FASTENERS AT 3-FT. MAX. INTERVALS
4. CONCRETE VAULT (5'x 9'x 7'-2" INSIDE DIMENSIONS) , WITH WATERTIGHT BILCO COVER (H20 LOADING)
5. WATER-TIGHT GROUT. RESTRAIN INLET/OUTLET PIPE WITH WELDED FLANGE OR SHACKLE TO THRUST BLOCK TO PREVENT. SHACKLE THROUGH VAULT IF CHECK VALVE ASSEMBLY IS REMOVED.
6. 4" DRAIN TO DAYLIGHT (MINIMUM SLOPE 2%)
7. ADJUSTABLE PIPE STANCHION, GRINELL PIPE SUPPORTS. (SECURE TO FLOOR)
8. VALVE ASSEMBLY TO BE CENTERED IN VAULT
9. CL. 53 D.I., MJ WITH MEGALUGS
10. STAINLESS STEEL SHACKLES AND THRUST BLOCK (3000 PSI) AT BOTH ENDS OF VAULT
11. R.S. GATE VALVE WITH HAND WHEEL OPERATION

NOTES:

1. ASSEMBLY SHALL BE MAINTAINED BY PROPERTY OWNER AND ANNUAL CERTIFICATION REQUIRED.
2. FIRELINE SHALL NOT BE PUT INTO SERVICE UNTIL THE THE BACKFLOW PREVENTION DEVICE IS APPROVED BY THE CITY
3. A REDUCED PRESSURE BACKFLOW PREVENTION DEVICE MAY BE REQUIRED IF DEEMED NECESSARY BY THE CITY.
4. PAINT PIPING WITH PARKER PAINT MARINE ENAMEL, MARARTHON 1065, TAHOE BLUE.
5. SIZE OF SYSTEM TO BE APPROVED BY THE CITY.

HARTSTENE POINTE WATER STANDARD DETAILS			
DETECTOR DOUBLE-CHECK VALVE ASSEMBLY			
APPROVED: OPERATIONS MANAGER DATE			DWG. NO. 24
DATE: 4/98	DRWN: Q.M.T.	CHKD: T.P.	SCALE: NONE

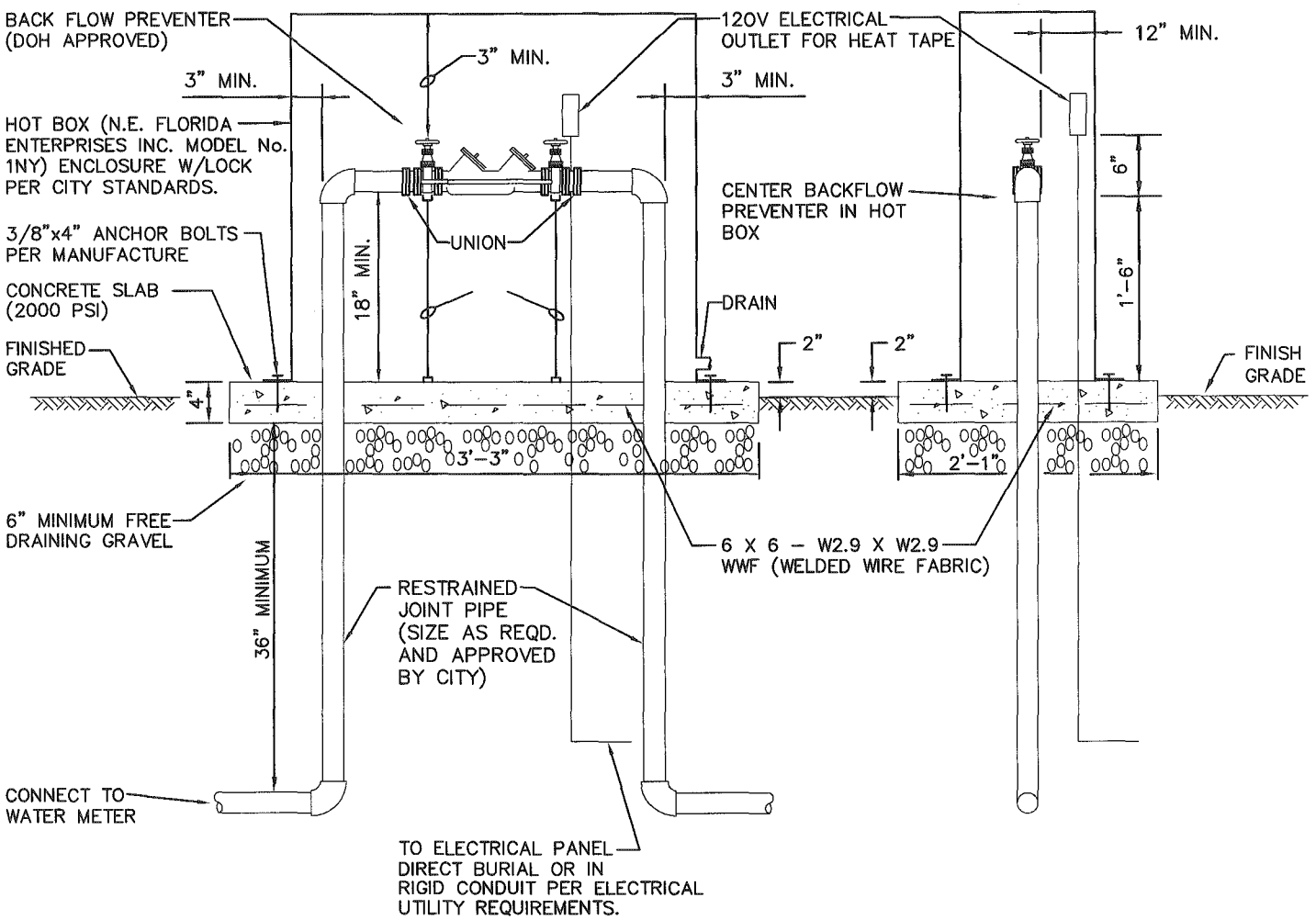

REDUCED PRESSURE BACKFLOW DEVICE

NOT TO SCALE

(1) PROVIDE CITY APPROVED SUPPORT FOR 2 1/2" AND LARGER DEVICES.

HARTSTENE POINTE WATER STANDARD DETAILS			
REDUCED PRESSURE BACKFLOW DEVICE			
APPROVED: OPERATIONS MANAGER DATE			DWG. NO. 25
DATE: 4/98	DRWN: Q.M.T.	CHKD: T.P.	SCALE: NONE

NOTES:

1. WHERE POSSIBLE, MAINTAIN NATURAL VEGETATION FOR SILT CONTROL.

2. TEMPORARY SILTATION AND DETENTION PONDS SHALL BE CONSTRUCTED BY PLACING STRAW BALES OR FILTER FABRIC FENCES ACROSS SWALES. PONDS SHALL BE CONSTRUCTED TO PROVIDE 2 CUBIC FEET OF SETTLING POND PER 50 SQUARE FEET OF CLEARED AREA TRIBUTARY TO THE POND.

3. FILTER FABRIC FENCES OR STRAW BALES SHALL BE LOCATED AT THE BOTTOM OR TOE OF NEWLY EXCAVATED SLOPES AS INDICATED ON THE PLANS.

4. CONSTRUCT ROCK CHECK DAMS IN OPEN DITCHES AS REQUIRED

5. PROVIDE EROSION CONTROL ON STEEP AND NEWLY GRADED SLOPES, CONTRACTOR SHALL EMPLOY EROSION CONTROL BLANKET OR JUTE MATTING IMMEDIATELY AFTER GRADING SLOPES AND THE APPLICATION OF SEEDING. THIS SHALL BE DONE AND IN PLACE BEFORE THE FALL RAINFALL BEGINS.

6. ALL TEMPORARY EROSION CONTROL STRUCTURES SHALL BE MAINTAINED IN SATISFACTORY CONDITION UNTIL CLEARING AND/OR CONSTRUCTION IS COMPLETED AND SURFACE RESTORATION HAS BEEN COMPLETED.

7. RETURN SILTATION CONTROL AREAS TO ORIGINAL GROUND CONDITIONS.

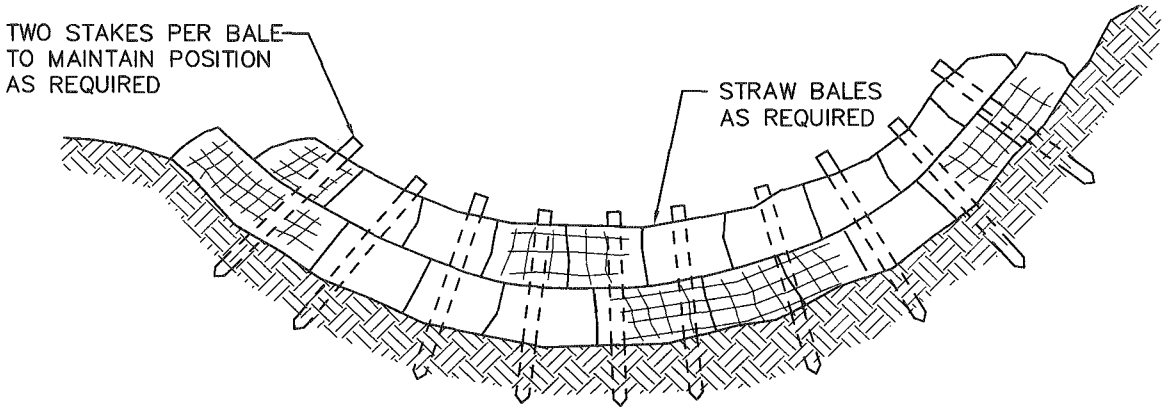

ELEVATION

STRAW BALE DAM

HARTSTENE POINTE WATER STANDARD DETAILS			
STRAW BALE DAM			
APPROVED: OPERATIONS MANAGER DATE			DWG. NO. 26
DATE: 4/98	DRWN: Q.M.T.	CHKD: T.P.	SCALE: NONE

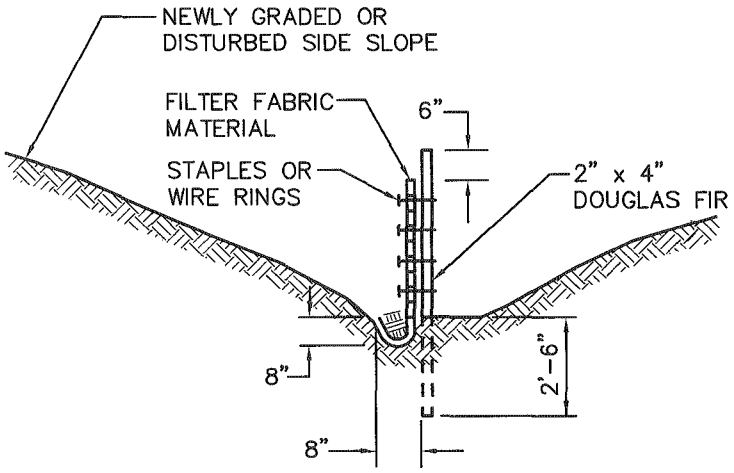

CROSS SECTION

NOTES:

1. WHERE POSSIBLE, MAINTAIN NATURAL VEGETATION FOR SILT CONTROL
2. TEMPORARY SILTATION SHALL BE CONSTRUCTED BY PLACING FILTER FABRIC FENCES ACROSS SWALES UTILIZING FILTER SYSTEM PRIOR TO DISCHARGE
3. ALL TEMPORARY SILTATION SHALL BE MAINTAINED IN A SATISFACTORY CONDITION UNTIL SUCH TIME THAT CLEARING AND/OR CONSTRUCTION IS COMPLETED AND SURFACE RESTORATION HAS BEEN COMPLETED
4. RETURN SILTATION CONTROL AREAS TO ORIGINAL GROUND CONDITIONS.

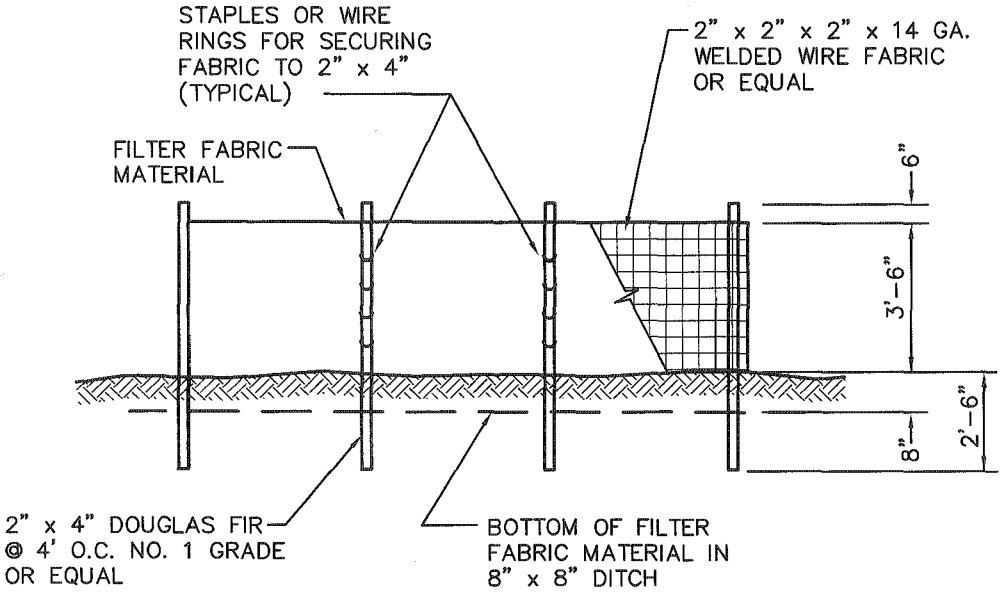

ELEVATION

SILT FENCE

HARTSTENE POINTE WATER STANDARD DETAILS			
SILT FENCE			
APPROVED: OPERATIONS MANAGER DATE			DWG. NO. 27
DATE: 4/98	DRWN: Q.M.T.	CHKD: T.P.	SCALE: NONE

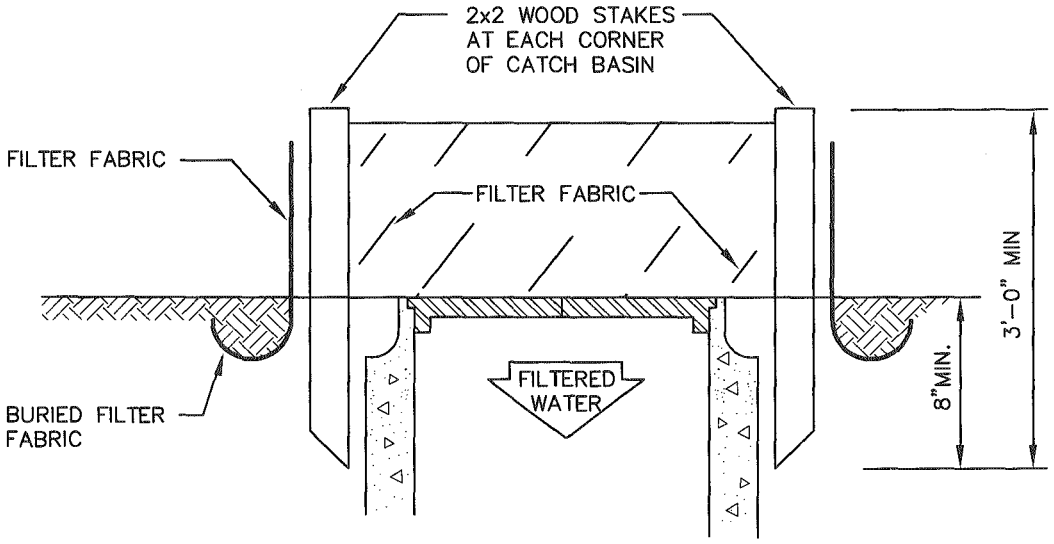

NOTE:
WOOD STAKES AROUND PERIMETER OF INLET SHALL BE SPACED A MAXIMUM OF 3 FEET APART

HARTSTENE POINTE WATER STANDARD DETAILS			
STORM DRAIN INLET PROTECTION			
APPROVED: OPERATIONS MANAGER DATE			DWG. NO. 28
DATE: 4/98	DRWN: Q.M.T.	CHKD: T.P.	SCALE: NONE

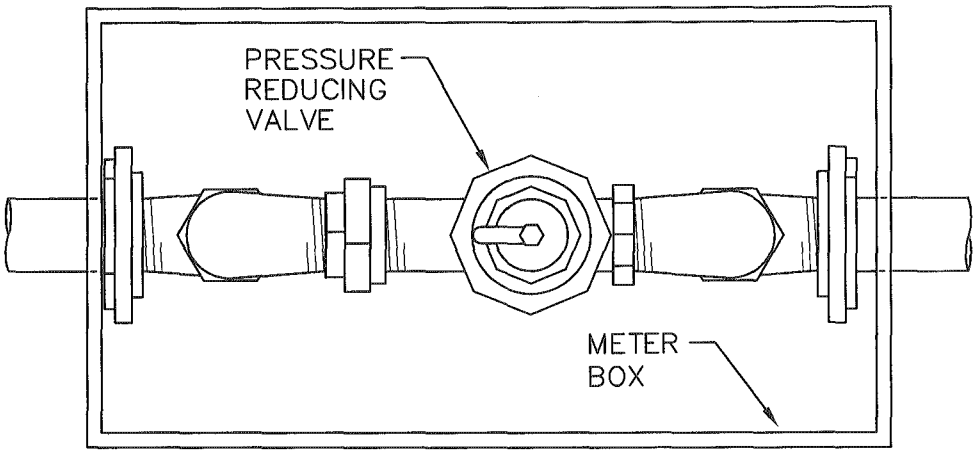

NOTE:
BOX SHALL BE LOCATED BEHIND WATER METER ON PRIVATE PROPERTY AND SHALL BE THE PROPERTY OWNER'S RESPONSIBILITY TO MAINTAIN. METER BOX PER CITY WATER SERVICE STANDARDS.
WILKINS NO. 600 REGULATOR, ALL BRONZE WATER REDUCING VALVE AND STRAINER, 3/4", 1", 1-1/2" OR 2" BY-PASS, MONEL TRIM. MAX. INITIAL PRESSURE SETTING: 50 LBS. FOR WATER-AIR OR CITY APPROVED EQUAL.

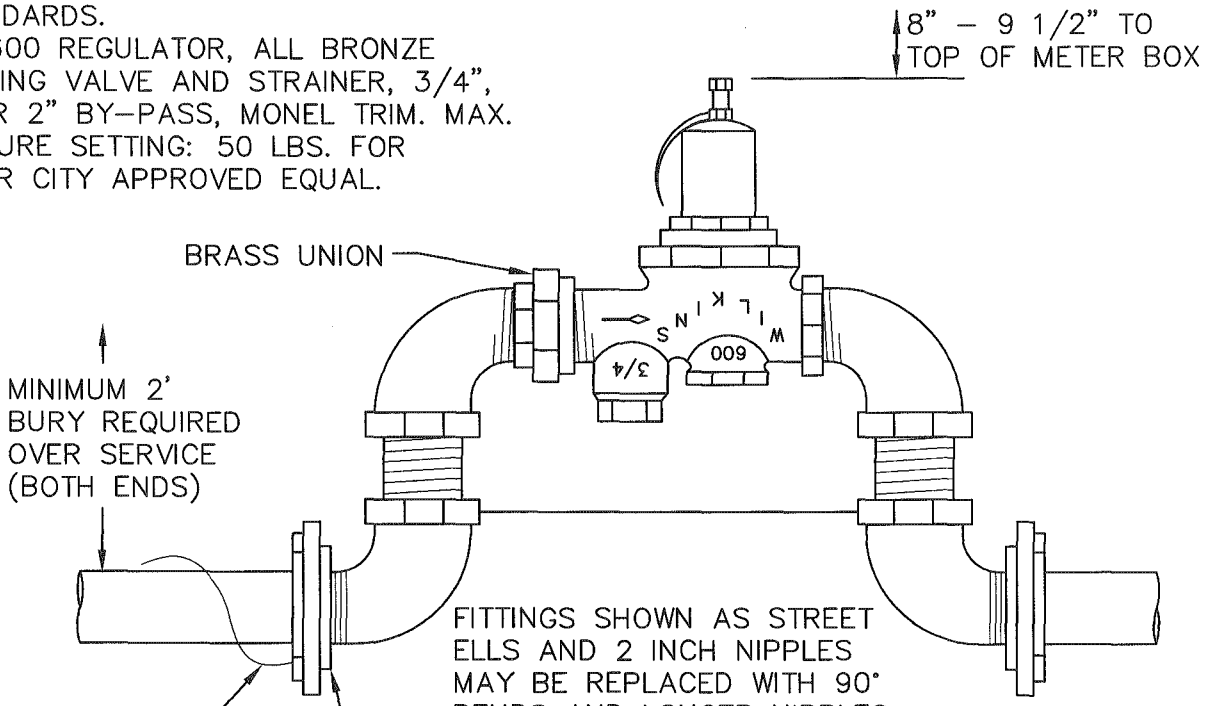

FITTINGS SHOWN AS STREET ELLS AND 2 INCH NIPPLES MAY BE REPLACED WITH 90° BENDS AND LONGER NIPPLES SHALL CONFIRM WITH DIMENSIONS REQUIRED. ALL FITTINGS SHALL BE BRASS.

HARTSTENE POINTE WATER STANDARD DETAILS			
PRESSURE REDUCING VALVE WITH BOX FOR 3/4", 1", 1 1/2" OR 2" SERVICE LINES			
APPROVED: OPERATIONS MANAGER DATE			DWG. NO. 29
DATE: 4/98	DRWN: Q.M.T.	CHKD: T.P.	SCALE: NONE

* SEE WATER SERVICE DETAIL

GENERAL NOTES

1. ALL WORK SHALL BE IN CONFORMANCE WITH THE CITY OF VADER WATERWORKS DESIGN AND CONSTRUCTION STANDARDS AS SHOWN ON THE PROJECT PLANS AND AS REVIEWED AND APPROVED BY THE CITY.

2. BLOW-OFF ASSEMBLIES SHALL BE INSTALLED WHERE SHOWN ON THE PLANS AS WELL AS AT ALL SYSTEM LOW POINTS AND ON DEAD-END MAINS.

3. AIR RELEASE/VACUUM RELEASE VALVES SHALL BE INSTALLED WHERE SHOWN ON THE PLANS AND AT ALL SYSTEM HIGH POINTS.

4. DISTRIBUTION PIPING SHALL HAVE A MINIMUM 36 INCH DEPTH OF COVER. EXACT DEPTH OF PIPE SHALL BE DETERMINED IN THE FIELD TO GENERALLY CONFORM TO TOPOGRAPHY. PIPE SHALL MAINTAIN POSITIVE GRADE BETWEEN BLOW-OFFS/FIRE HYDRANTS AND AIR RELEASE/VACUUM RELEASE VALVES.

5. PRESSURE TESTING AND DISINFECTION SHALL BE IN ACCORDANCE WITH THE ABOVE REFERENCED STANDARDS AND AS APPROVED BY THE CITY.

6. EXISTING UTILITIES AND SERVICES HAVE NOT NECESSARILY BEEN LOCATED OR SHOWN. THE CONTRACTOR SHALL LOCATE OR HAVE LOCATED ALL UNDERGROUND UTILITIES PRIOR TO BEGINNING CONSTRUCTION. THE ONE CALL NUMBER IS 1 (800) 424-5555. THE CONTRACTOR SHOULD ALSO NOTE THAT NOT ALL UTILITY OWNERS OR OPERATORS SUBSCRIBE TO THE ONE CALL SERVICE.

7. THE OWNER, OWNER'S REPRESENTATIVE, OR CONTRACTOR SHALL BE REQUIRED TO SCHEDULE A PRE-CONSTRUCTION CONFERENCE FOR ALL WATER SYSTEM CONSTRUCTION SHOWN ON THESE PLANS.

HARTSTENE POINTE WATER STANDARD DETAILS			
WATER MAIN INSTALLATION NOTES			
APPROVED: OPERATIONS MANAGER DATE			DWG. NO. 30
DATE: 4/98	DRWN: Q.M.T.	CHKD: T.P.	SCALE: NONE

Appendix Q

Construction Completion Report

Washington State Department of Health
Division of Environmental Health
Office of Drinking Water

CONSTRUCTION COMPLETION REPORT FORM

In accordance with WAC 246-290-120 (5), a ***Construction Completion Report*** is required for all approved construction projects. Purveyors **must** submit a Construction Completion Report to the Office of Drinking Water (ODW) within sixty (60) days of completion and before use of any water system facility. This includes any source, water quality treatment, storage tanks, booster pump facilities, and distribution projects.

Please type or print legibly in ink:

_____
Name of Water System

_____
Name of Purveyor (Owner or System Contact)

_____
Mailing Address

_____
City State Zip

DOH System ID No.: _____

DOH Project No.: _____
(if applicable)

Date Construction Documents Approved by DOH _____
(If applicable)

PROJECT NAME AND DESCRIPTIVE TITLE: _____

CHECK ONE: ☐ Entire Project Completed. ☐ Description of Portions Completed.

PROFESSIONAL ENGINEER'S ACKNOWLEDGMENT *(Complete items below--Attach additional sheets as needed)*

The undersigned professional engineer (PE), or their authorized agent, has inspected the above-described project which, as to layout, size and type of pipe, valves and materials, reservoir and other designed physical facilities, has been constructed and is substantially completed in accordance with construction documents reviewed by the purveyor's engineer or approved by the DOH. In the opinion of the undersigned engineer, the installation, physical testing procedures, water quality tests, and disinfection practices were carried out in accordance with state regulations and principles of standard engineering practice.

I have reviewed the disinfection procedures ☐, pressure test results ☐, and results of the bacteriological test(s) ☐ for this project and certify that they comply with the requirements of the construction standards/specifications approved by the DOH. (Check all boxes that apply that are consistent with the nature of the project.)

This project changes the physical capacity of the system to serve consumers. The system is now able to serve _____ equivalent residential units (ERUs.) ☐ Not applicable

P.E.'s Seal

_____
Date Signed

_____
Name of Engineering Firm

_____
Name of PE Acknowledging Construction

_____
Mailing Address

_____
City State Zip

_____
Engineer's Signature

State/Federal Funding Type (if any) _____

Please return completed form to DOH regional office checked below.

☐ **NWRO Drinking Water**
Department of Health
20435 72nd Ave. S, Ste 200
Kent, WA 98032-2358
(253) 395-6750

☐ **SWRO Drinking Water**
Department of Health
PO Box 47823
Olympia, WA 98504-7823
(360) 236-3030

☐ **ERO Drinking Water**
Department of Health
1500 W. Fourth Ave, Suite 305
Spokane, WA 99201
(509) 456-3115

For persons with disabilities, this document is available on request in other formats. To submit a request, please call 1-800-525-0127 (TTY 1-800-833-6388).

The purveyor must attach a completed Water Facilities Inventory (WFI) form in accordance with WAC 246-290-120(6), if applicable. Contact the regional office in your area for WFI forms or additional Construction Completion Report forms.

CONSTRUCTION COMPLETION REPORT FORM FOR DISTRIBUTION MAIN PROJECTS

In accordance with WAC 246-290-120(5), a ***Construction Completion Report*** is required for all construction projects. Under the submittal exception process for distribution main projects, designed by a professional engineer but not submitted to DOH for approval, the report does not need to be submitted. **However, the purveyor must keep the Construction Completion Report on file and make it available for review upon request by DOH in accordance with WAC 246-290-125 (2)(b).** Furthermore:

(1) The report form **must** bear the seal, date and signature of a professional engineer (PE) licensed in the state of Washington; and

(2) Per WAC 246-290-120(5)(c), the amount of change in the physical capacity of a system must be documented, if the project results in a change in physical capacity.

Name of Water System

Name of Purveyor (Owner or System Contact)

Mailing Address

City State Zip

DOH System ID No.: _____

Date Water System Plan that includes Standard Construction Specifications

Date Standard Specifications Approved by DOH: _____

PROJECT NAME AND DESCRIPTIVE TITLE:

(Include the name of any development project and number of services.)

Date Project or Portions Thereof Completed

PROFESSIONAL ENGINEER'S ACKNOWLEDGMENT

The undersigned professional engineer (PE), or his/her authorized agent, has inspected the above-described project that, as to layout, size and type of pipe, valves and materials, and other designed physical facilities, has been constructed and is substantially completed in accordance with construction documents reviewed by the purveyor's engineer. In the opinion of the undersigned engineer, the installation, physical testing procedures, water quality tests, and disinfection practices were carried out in accordance with state regulations and principles of standard engineering practice.

I have reviewed the disinfection procedures, pressure test results, and results of the bacteriological test(s) for this project and certify that they comply with the requirements of the construction standards/specifications approved by DOH.

P.E.'s Seal

Date Signed

Name of Engineering Firm

Name of PE Acknowledging Construction

Mailing Address

City State Zip

Engineer's Signature

State/Federal Funding Type (if any) _____

Please keep a completed, signed, and stamped copy on file.

☐ **NWRO Drinking Water**
Department of Health
20435 72nd Ave. S, Ste 200
Kent, WA 98032-2358
(253) 395-6750

☐ **SWRO Drinking Water**
Department of Health
PO Box 47823
Olympia, WA 98504-7823
(360) 236-3030

☐ **ERO Drinking Water**
Department of Health
1500 W. Fourth Ave, Suite 305
Spokane, WA 99201
(509) 456-3115

For persons with disabilities, this document is available on request in other formats. To submit a request, please call 1-800-525-0127 (TTY 1-800-833-6388).

Washington State Department of Health
Division of Environmental Health
Office of Drinking Water

Construction Completion Report Form for Submittal Exception Process

In accordance with WAC 246-290-120(5), a ***Construction Completion Report Form*** is required for all approved construction projects. Purveyors **must** submit a Construction Completion Report to the Department of Health (DOH) within sixty (60) days of completion and before use of any water system facility. This includes any storage tank and booster pump facilities reviewed under the submittal exception process as provided by WAC 246-290-125(3). Under the submittal exception process for other distribution-related facilities (including distribution main projects), designed by a professional engineer but not submitted to DOH for approval, the report does not need to be submitted. However, the purveyor **must** keep the Construction Completion Report on file and make it available for review upon request by DOH in accordance with WAC 246-290-125 (2)(b) and WAC 246-290-125(3)(f). Furthermore:

(1) The report form **must** bear the seal, date and signature of a professional engineer (PE) licensed in the state of Washington;
(2) If project construction is being completed in stages, attach a description of the portion of the project being completed as approved that is acknowledged by a PE on the date given below;
(3) As future portions of staged construction projects are completed, each **must** be acknowledged by a PE; and
(4) Per WAC 246-290-120(5)(c), the amount of change in the physical capacity of a system must be documented, if the project results in a change in physical capacity.

Please type or print legibly in ink:

_____ DOH System ID No.:_____

Name of Water System

_____

Name of Purveyor (Owner or System Contact)

_____ Date WSP Approved by DOH_____

Mailing Address

_____

City State Zip

Type of Project (check all that apply):
(Project must be identified in the CIP of the Water System Plan)

- ☐ Booster Pump Station(s) - If checked send form to DOH
- ☐ Reservoir and Storage Tank(s) – If checked send form to DOH
- ☐ Pressure Tank(s)
- ☐ Internal Tank Coating
- ☐ Transmission Main(s)
- ☐ Other (specify):

_____

For project reports and construction documents that have not been reviewed by DOH, provide name of PE who completed *Engineering Design Review Report Form* (a departmental form):

_____
Name of PE Shown as Review Engineer

Project Name and Descriptive Title:
Check one:
☐ Entire Project Completed. ☐ Description of Portions Completed.
Complete (Attach additional sheets as needed):

Professional Engineer's Acknowledgment

The undersigned professional engineer (PE), or their authorized agent, has inspected the above-described project which, as to layout, size and type of pipe, valves and materials, reservoir and other designed physical facilities, has been constructed and is substantially completed in accordance with construction documents reviewed by the purveyor's engineer or approved by the DOH. In the opinion of the undersigned engineer, the installation, physical testing procedures, water quality tests, and disinfection practices were carried out in accordance with state regulations and principles of standard engineering practice.

I have reviewed the disinfection procedures ☐ , pressure test results ☐ , and results of the bacteriological test(s) ☐ for this project and certify that they comply with the requirements of the construction standards/specifications approved by the DOH. (Check all boxes that apply that are consistent with the nature of the project.)

This project changes the physical capacity of the system to serve consumers. The system is now able to serve _____ equivalent residential units (ERUs.) ☐ Not applicable

Name of Engineering Firm**

Name of PE Acknowledging Construction

Mailing Address**

PE's Seal

City State Zip**

Engineer's Signature Date

**Complete if PE acknowledging construction completion is not employed directly by water system.

Please return completed form to DOH regional office checked below if the project is for new storage tanks or booster pump stations. For all other distribution related projects, please maintain on file.

☐ NWRO Drinking Water Department of Health 20435 72nd Ave S Suite 200 K17-12 Kent, WA 98032-2358 (253) 395-6750	☐ SWRO Drinking Water Department of Health PO Box 47823 Olympia, WA 98504-7823 (360) 236-3030	☐ ERO Drinking Water Department of Health 1500 W. Fourth Ave, Suite 305 Spokane, WA 99201 (509) 456-3115

The purveyor must attach a completed Water Facilities Inventory (WFI) form in accordance with WAC 246-290-120(6), if applicable. Contact the regional office in your area for WFI forms or additional Construction Completion Report forms.

For persons with disabilities, this document is available on request in other formats. To submit a request, please call 1-800-525-0127 (TTY 1-800-833-6388).

Appendix R

Preliminary Cost Estimates

*Cost estimates are in 2007 dollars

Hartstene Pointe
Preliminary Project Cost Estimate
Distribution System Improvement D-1
Color Code Fire Hydrants

NO.	ITEM	QUANTITY	UNIT PRICE	AMOUNT
1	Paint	LUMP SUM	$ 1,000	$ 1,000
	Subtotal			$ 1,000
	Tax rate (7.7%)			77
	Subtotal:			$ 1,077
	Contingency (20%)			$ 215
	Total Estimated Construction Cost:			**$ 1,292**
	Engineering and AdministrativeCosts (25%):			$ -
	Total Estimated Project Cost:			**$ 1,292**

Hartstene Pointe
Preliminary Project Cost Estimate
Distribution System Improvement D-2
Leak Detection Test

NO.	ITEM	QUANTITY	UNIT PRICE	AMOUNT
1	Mobilization, Cleanup, and Demobilization	LUMP SUM	$ 1,200	$ 1,200
	Subtotal			$ 1,200
	Tax rate (7.7%)			92
	Subtotal:			$ 1,292
	Contingency (20%)			$ 300
	Total Estimated Construction Cost:			**$ 1,600**
	Engineering and Administrative Costs (25%):			$ 400
	Total Estimated Project Cost:			**$ 2,000**

Hartstene Pointe
Preliminary Project Cost Estimate
Meter Improvement M-1
Water Service Meter Installation

NO.	ITEM	QUANTITY	UNIT PRICE	AMOUNT
1	3/4" Water Service Meter and Box	395 EA	$ 250	$ 98,750
2	Utility Locate	LUMP SUM	$ 1,500	$ 1,500
3	Trenching and Excavation	LUMP SUM	$ 15,000	$ 15,000
4	Connection to Existing Service Line	395 EA	$ 500	$ 197,500
5	Update Water System Base Map	LUMP SUM	$ 2,000	$ 2,000
6	Surface Restoration	LUMP SUM	$ 50,000	$ 50,000
	Subtotal			$ 364,750
	Tax rate (7.7%)			28,086
	Subtotal:			$ 392,836
	Contingency (20%)			$ 78,164
	Total Estimated Construction Cost:			**$ 471,000**
	Engineering and Administrative Costs (25%):			$ 118,000
	Total Estimated Project Cost:			**$ 589,000**

Hartstene Pointe
Preliminary Project Cost Estimate
Storage System Improvement ST-1
Booster Pump Station

NO.	ITEM	QUANTITY	UNIT PRICE	AMOUNT
1	Mobilization	LUMP SUM	$ 12,000	$ 12,000
2	Trench Excavation and Safety	LUMP SUM	$ 1,000	$ 1,000
3	Gravel Base	LUMP SUM	$ 500	$ 500
4	Diesel Fired Booster Pump	LUMP SUM	$ 120,000	$ 120,000
5	Piping, Valves, and Appurtenances	LUMP SUM	$ 2,000	$ 2,000
6	Reservoir Modifications	LUMP SUM	$ 7,000	$ 7,000
7	Elecrical	LUMP SUM	$ 25,000	$ 25,000
	Subtotal			$ 167,500
	Tax rate (7.7%)			12,898
	Subtotal:			$ 180,398
	Contingency (20%)			$ 36,103
	Total Estimated Construction Cost:			**$ 216,500**
	Engineering and AdministrativeCosts (25%):			$ 54,500
	Total Estimated Project Cost:			**$ 271,000**

Hartstene Pointe
Preliminary Project Cost Estimate
Source Improvement SO-1
Well Rehabilitation

NO.	ITEM	QUANTITY	UNIT PRICE	AMOUNT
1	Rehabilitation Cost	LUMP SUM	$ 15,000	$ 15,000
	Subtotal			$ 15,000
	Tax rate (7.7%)			1,155
	Subtotal:			$ 16,155
	Contingency (20%)			$ 3,245
	Total Estimated Construction Cost:			**$ 19,400**
	Engineering and Administrative Costs (25%):			$ 4,600
	Total Estimated Project Cost:			**$ 24,000**

Hartstene Pointe
Preliminary Project Cost Estimate
Treatment System Improvement TR-2
Stage 2 D/DBP Rule Requirements

NO.	ITEM	QUANTITY	UNIT PRICE	AMOUNT
1	IDSE Plan	LUMP SUM	$ 5,500	$ 5,500
2	IDSE Report	LUMP SUM	$ 4,250	$ 4,250
3	TTHM and HAA5 Sample Testing	LUMP SUM	$ 2,500	$ 2,500
	Subtotal			$ 12,250
	Tax rate (7.7%)			943
	Subtotal:			$ 13,193
	Contingency (20%)			$ 2,807
	Total Estimated Construction Cost:			**$ 16,000**
	Engineering and Administrative Costs (25%):			$ 4,000
	Total Estimated Project Cost:			**$ 20,000**

Hartstene Pointe
Preliminary Project Cost Estimate
Treatment System Improvement TR-3
WTP Environmental Control

NO.	ITEM	QUANTITY	UNIT PRICE	AMOUNT
1	Mobilization and Demobilization	LUMP SUM	$ 1,000	$ 1,000
2	Dehumidifier	2	$ 450	$ 900
3	Hypochlorite Ventilation Closet	2 EA	$ 1,500	$ 3,000
4	Electrical	LUMP SUM	$ 5,000	$ 5,000
	Subtotal			$ 9,900
	Tax rate (7.7%)			762
	Subtotal:			$ 10,662
	Contingency (20%)			$ 2,338
	Total Estimated Construction Cost:			**$ 13,000**

Hartstene Pointe
Preliminary Project Cost Estimate
Treatment System Improvement TR-4
WTP PLC System Upgrade

NO.	ITEM	QUANTITY	UNIT PRICE	AMOUNT
1	RUGID PLC	LUMP SUM	$ 3,750	$ 3,750
2	Installation and Programming	LUMP SUM	$ 4,000	$ 4,000
	Subtotal			$ 7,750
	Tax rate (7.7%)			597
	Subtotal:			$ 8,347
	Contingency (20%)			$ 1,653
	Total Estimated Construction Cost:			**$ 10,000**
	Engineering and AdministrativeCosts (25%):			$ 2,500
	Total Estimated Project Cost:			**$ 12,500**

Hartstene Pointe
Preliminary Project Cost Estimate
Treatment System Improvement TR-5
WTP Improvements

NO.	ITEM	QUANTITY	UNIT PRICE	AMOUNT
1	Mobilization and Demobilization	LUMP SUM	$ 4,444	$ 4,444
1	Filtration Media	LUMP SUM	$ 8,000	$ 8,000
2	Chem Feed Pumps	4 EA	$ 1,000	$ 4,000
3	Chem Holding Tanks	4 EA	$ 550	$ 2,200
4	Pipes and Fittings	LUMP SUM	$ 3,800	$ 3,800
5	Paint	LUMP SUM	$ 5,000	$ 5,000
6	Electrical	LUMP SUM	$ 17,000	$ 17,000
	Subtotal			$ 44,444
	Tax rate (7.7%)			3,422
	Subtotal:			$ 47,867
	Contingency (20%)			$ 9,133
	Total Estimated Construction Cost:			**$ 57,000**
	Engineering and Administrative Costs (25%):			$ 14,000
	Total Estimated Project Cost:			**$ 71,000**

Appendix S

DOH Documents

MASON COUNTY
DEPARTMENT OF COMMUNITY DEVELOPMENT

Planning
Mason County Bldg. I 411 N. 5th
P.O. Box 279 Shelton, WA 98584

Shelton (360) 427-9670
Belfair (360) 275-4467
Elma (360) 482-5269

June 17, 2008

Tom Moore
Deputy Director
Mason County Utilities & Waste Management
PO Box 578
Shelton, WA 98584

RE: Hartstene Pointe Water System Review, DDR2008-00088, DOH ID # 315690

Dear Tom,

Please find enclosed a signed and approved Attachment 5, Consistency Statement Checklist, for the above water system draft plan dated December 2008. The consistency determination is based on the draft materials provided by you for the review.

If you have additional questions or concerns regarding this matter, please contact me at (360) 427-9670 ext. 366.

Sincerely,

Robert D. Fink, AICP
Planning Manager

H:\WP\PROJECTS\2008pro\Hartstene PointeWS - Moore.doc

Attachment 5: Water System Plan and Small Water System Management Program Consistency Statement Checklist

This checklist is intended to ensure consistency of water system planning documents with adopted local comprehensive plans and development regulations. Each local planning jurisdiction in which the water utility provides service will review the relevant water system planning information and provide a signed consistency statement to the utility for submittal to the Department of Health. If the local planning agency will not respond, the highest authority within the utility (chair of governing body, executive director of private companies, etc.) must sign to verify consistency of the plan information.

Water System Name: Hartstene Pointe PWS ID: 315690

Planning Document Title: H.P. Water System Plan Plan Date: Dec. 2007

Local Planning Jurisdiction: Mason County

Consistency Statement (Reference Municipal Water Law Section 5 and 8, amendment to chapter 90.03.386 and chapter 43.20 RCW)	Page(s) in Planning Document (completed by utility)	Yes – No – Not Applicable
The retail service area, and any other areas not served by a separate public water system, and land use identified in the WSP is consistent with the *adopted comprehensive plan and adopted development regulations and policies.*	1-12, 2-5, 2-1, 2-6 5-5, 5-6	Yes
For WSPs only: The growth projection used to forecast water demand for the retail service area is consistent with the adopted city/county's population growth projections (and commercial development projection if applicable). If a different growth projection was used, the alternative growth projection and methodology proposed is acceptable based on explanation given.	E-1 2-5 2-6	yes
For WSPs only: New potential large water users (that may have a significant impact on the water system) that the city/county is aware of have been identified in the WSP.	1-12 2-6	yes
For city-owned systems only: All policies regarding water service outside the corporate boundaries are included in this WSP. These policies are consistent with the adopted *comprehensive plan* and *development regulations.*		NA
Where the local planning agency is unable to sign a Consistency Statement: Provide documentation of efforts to coordinate with local agencies with a 60-day timeline for local agency to respond. Include: name of contact, date, type of effort attempted, and response from local agency.		

I certify that the above statements are true to the best of my knowledge and that these statements support the conclusion that the subject-planning document is consistent with adopted comprehensive plans, development regulations, and other policies.

Robert D Fink — June 17, 2008

Signature — Date

Robert D. Fink, Planning Manager, Mason Co.

Printed Name, Title, & Jurisdiction

****For any issues of inconsistency, please provide comments on how they can be resolved. ****